SINOTRUK

D10, EURO III ENGINE SPARE PARTS CATALOG

https://www.sinosoon.com Email:market@sinosoon.com

INDEX

CYLINDER BODY	Page 3
CYLINDER HEAD AND VALVE MECHANISM (TWO VALVES)	Page 8
CYLINDER HEAD AND VALVE MECHANISM (FOUR VALVES)	Page 11
CRANKSHAFT & FLYWHEEL	Page 14
PISTON & CONNECTING ROD	Page 16
INTAKE & EXHAUST (TWO VALVES)	Page 17
INTAKE & EXHAUST (FOUR VALVES)	Page 19
INTAKE & EXHAUST (REAR POSITION)	Page 21
WATER PUMP & COOLING SYSTEM	Page 25
OIL PUMP & FILTERS	Page 27
FUEL SUPPLY	Page 29
ELECTRONIC SYSTEM	Page 33
AIR COMPRESSOR	Page 35
OIL PAN	Page 36
PTO	Page 37

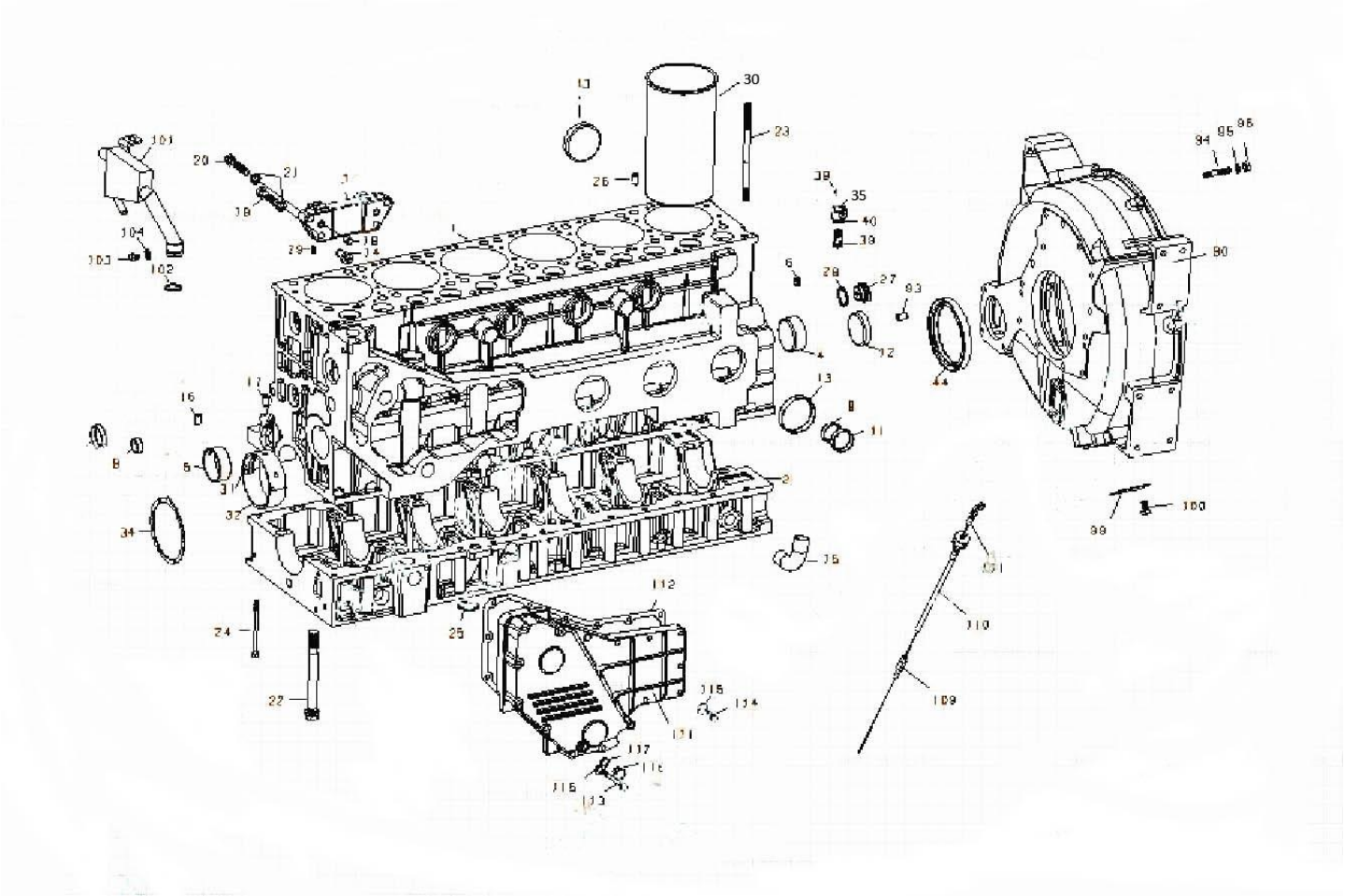

CYLINDER BODY, D10 ENGINE EURO-III		
Serial	Name	Number
1	Cylinder body	AZ1096010190
1	Cylinder body	AZ1096010020
1	Cylinder body	AZ1099010077
1	Cylinder body	AZ1099010081
1	Cylinder body	AZ1096010134
1	Cylinder body	AZ1095010010
1	Cylinder body	AZ1099010078
1	Cylinder body	AZ1099010079
2	Crankcase	61500010366C
2	Crankcase	161500010369
3	Pump bracket	VG1540010019
4	Camshaft bushing	VG1560010029
5	Camshaft bushing	VG2600010990
6	Plug 17 × 7.3	90003984080
7	Plug 17 × 8	90003989480

8	plug 28 × 12	90003989204
9	Plug 40 × 12	90003989289
10	plug 45 × 12	90003982121
11	plug 45 × 12	90003989215
12	plug 65 × 14	90003989288
13	plug 75 × 14	90003989210
14	Air compressor hose connector	VG2600130026
15	Oil elbow	VG2600070097
15	Oil elbow	VG1460010011
16	Pin	90003901604A
17	Pin	Q5211220
18	Pin	Q5211216
19	Hex head bolts	90003802650
20	Hex head bolts	90011350045
21	Spring washer	90003931142
22	Main bearing bolts	VG14010114
22	Main bearing bolts	VG14010217
23	Head bolt	VG1500010185
24	Hex head bolts	90003802493
25	Seals	VG1400010032
26	Pin	190003901604
27	Plug	VG1460070011
28	Spring pins	90003909626
29	Hexagon head screw plugs	90003962051
30	Cylinder liner	VG1540010006
31	Main bearing	VG1500010046
32	Main bearing (upper)	VG1540010021
32	Main bearing (lower)	VG1540010022
34	Thrust Washer	VG1500010125
35	Oil nozzle assembly	VG2600010659
35	Oil nozzle assembly	VG1560010090
35	Oil nozzle assembly	VG1560019090
38	Spring pins	90003909603
39	Hollow bolt	90003962621
40	Composite gasket	VG9003080001
41	Front seal	VG1047010038
44	Oil seal assembly	VG1047010050
46	Gear chamber	61557010008

47	Hex head bolts	90003802523
48	Hex head bolts	90003802561
49	Hex head bolts	90003802571
50	Spring washer	90003931122
51	O-ring	VG288730061
52	Pin	90003901507
53	Seals	VG61000010134
54	Front oil seal seat	VG2600010928
55	Front seal cushion sheet	VG2600010934
56	Hex head bolts	90011260039
57	Spring pins	90003900085
58	Stud	90003813628
59	Stud	90003813638
60	Hexagon nuts	90003888453
61	Stud	90003813429
62	Stud	90003813467
63	Hexagon nut	90003871252
64	Wave spring washers	90003932023
65	Stud	90003813447
66	Air compressor gear cover	VG2600010830
66	Air compressor gear cover	VG1560010069
67	Air compressor gear cover gasket	VG14010040
68	Stud	90003813429
69	Hexagon nut	90003871252
70	Wave spring washers	90003932023
71	Hex head bolts	90003802576
72	Wave spring washers	90003932024
73	Cam gear cover	VG1500010008A
74	Cam gear cover gasket	VG14010070
75	Screws	90003862524
76	Saddle-shaped spring washers	90003932025
77	Stud	90003813443
78	Stud	90003813429
79	Hexagon nut	90003871252
80	Wave spring washers	90003932023
81	Pin	90003901507
82	Tube assembly	VG1560010028
82	Filler tube assembly	VG1500019039

83	Fuel short pipe gaskets	VG14010086
84	Hex head bolts	90003802321
85	Light spring washer	90003931082
90	Flywheel housing	R61540010010
91	Bolts flywheel housing	VG1500010062
92	Bolts flywheel housing	VG1500010101
93	Pin	90003901604
94	Stud	90003813537
95	Spring washer	90003931122
96	Hexagon nut	90003871305
97	Stud	90003813527
98	Hexagon nuts	90003888452
99	Observation hole cover	VG1800210011
100	Hex head bolts	90003802511
101	Oil and gas separation assembly	VG1500019045A
101	Oil and gas separation assembly	VG1099019055
102	Rubber O-ring	Q734B2650265
103	Hex head bolts	90003802321
104	Wave spring washers	90003936101
105	Pipe Clamp	VG31100040007
106	Rubber hose with fiber sandwich	VG12G00040038
107	Hose clamps	90003989301
108	Rubber hose	VG1500010174
108	Rubber hose	VG2600011106
108	Rubber hoses	VG1500010176
109	Fixing plate	VG609E110049
110	Clamps	90003171356
111	Oil cooler cover	VG1540010014A
112	Oil cooler cover gasket	VG1540010015A
113	Hex head bolts	90003800467
114	Hex head bolts	90003802437
115	Wave spring washers	90003932023
116	Hexagon head screw plugs	90003962020
117	Gasket	90003098014
118	Dipstick tube	VG2600010705
118	Dipstick tube	VG1500019077
119	Dipstick tube	VG1500010600
121	Single-tube clip	VG2600010445

122	Rubber clamp	VG2600010638
123	Support block	VG1500010031
124	Hex head bolts	9000382511
125	Spring washer	90003931122
126	Flat Washers	90003930271
131	Hex head bolts M8 × 40	90003802442
132	Flat Washers	90003930261
133	Left bracket assembly	VG9100590006
134	Right bracket	VG9100590009
135	Pin	190003900085

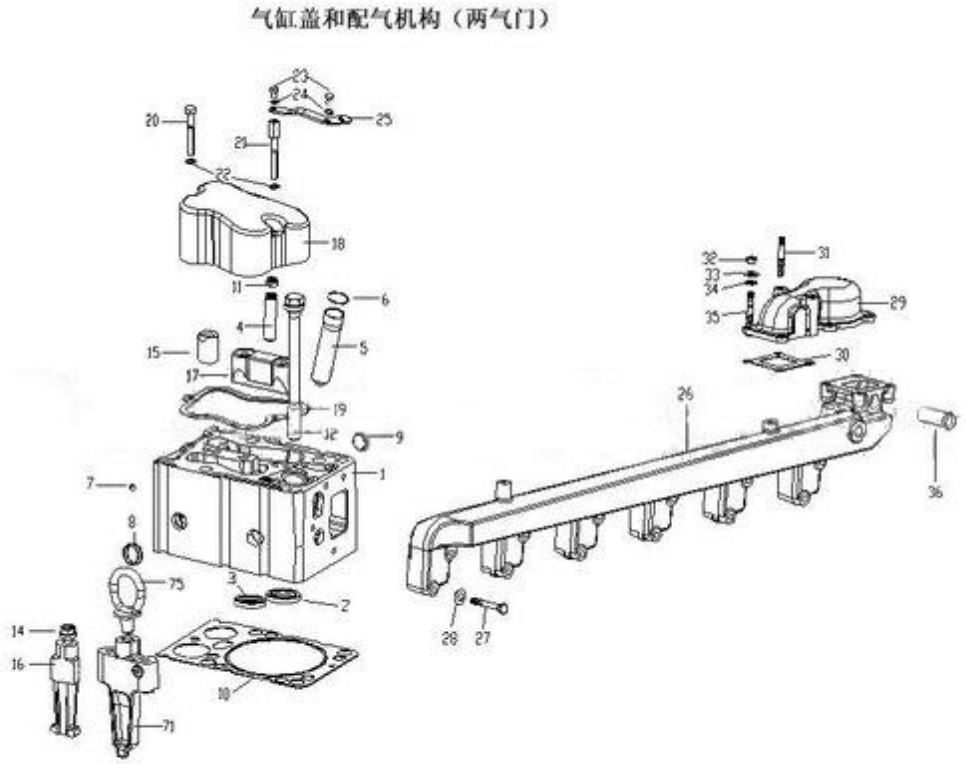

CYLINDER HEAD AND VALVE MECHANISM (TWO VALVES), D10 ENGINE EURO-III		
Serial	Name	Number
	Exhaust valve	vg1560050027
1	Cylinder head	az1096040028
2	Intake valve seat	vg1560040057
3	Exhaust valve seat	vg1560040037
4	Valve Guide	vg1560040031
5	Injector bush	vg1096040001a
6	Bush injector seals	vg1540040010
7	Hole clogging	vg1540040011
8	Plug	90003989721
9	Plug	90003989294
10	Cylinder head gasket	vg1500040065

11	Valve stem seal sets	vg1560040032
12	Master cylinder head bolts	vg1500040023
14	Shoulder nut	vg1200040034
15	Clamp block	vg1200040023a
16	Clamp block	vg1200040027
17	Clamp block	vg1500040009
18	Cylinder head cover	vg1500040067
19	Cylinder head cover gasket	vg14040065
20	Hex head bolts	90003800466
21	Hex head bolts	vg1096040021
22	Wave spring washers	90003932023
23	Hex head bolts	q150b0610
24	Wave spring washers	q41806
25	Support	vg1096080082
26	Outlet pipe	vg1096040330
27	Hex head bolts	90003800466
28	Wave spring washers	90003932023
29	Outlet pipe takeover	vg1096040332
30	Takeover outlet pipe gaskets	vg1096040331
31	Stud	90003813467
32	Hexagon nuts	90003871252
33	Wave spring washers	90003932023
34	Flat Washers	90014040007
35	Stud	90003813429
36	Fitting assembly	vg1500060045
37	Camshaft	vg1500050096
38	Camshaft Thrust Washer	vg14050133
39	Hex head bolts	90003802411
40	Camshaft timing gear	vg14050053
41	Cylindrical pin	90003901409
42	Hex head bolts	90003802443
43	Valve push rod assembly	vg1500050070
44	Valve tappet	vg1500050032
45	Exhaust valve	vg1560050041
46	Intake valve	vg1560051001
47	Valve inner spring	vg1500050001
48	Gas spring door	vg1500050002
49	Valve spring attendance	vg1500050109

50	Air lock folder	vg1500050025
51	Valve cap	vg1500050105
52	Exhaust valve rocker arm piston	vg1500050044
53	Needle	90016220001
54	Exhaust valve rocker arm assembly	vg1500050041
55	Valve rocker seat	vg1500050122a
56	Intake valve rocker	vg14050048
57	Screw	vg1500050017
58	Screw	vg14050010
59	Nut	vg2130050065
60	Hex head bolts	q150b12100tf2
61	Cover	vg1560050045
62	Hex head bolts	90003802411
63	Wave spring washers	90003932023
64	Seals	90003120602
65	Hex head bolt m10 × 80	vg1560050059
66	Apron	vg1560050045
67	Middle gear	vg1560050052
68	Bush	vg1560050051
69	Middle gear shaft	vg1540059031
70	Middle gear spacer	vg1540059032
71	Clamp block	vg1500040012
72	Ball	90016210015
73	Valve spring	vg1500050036
74	Rocker piston spring	vg1500050026
75	Screw rings	vg14010388

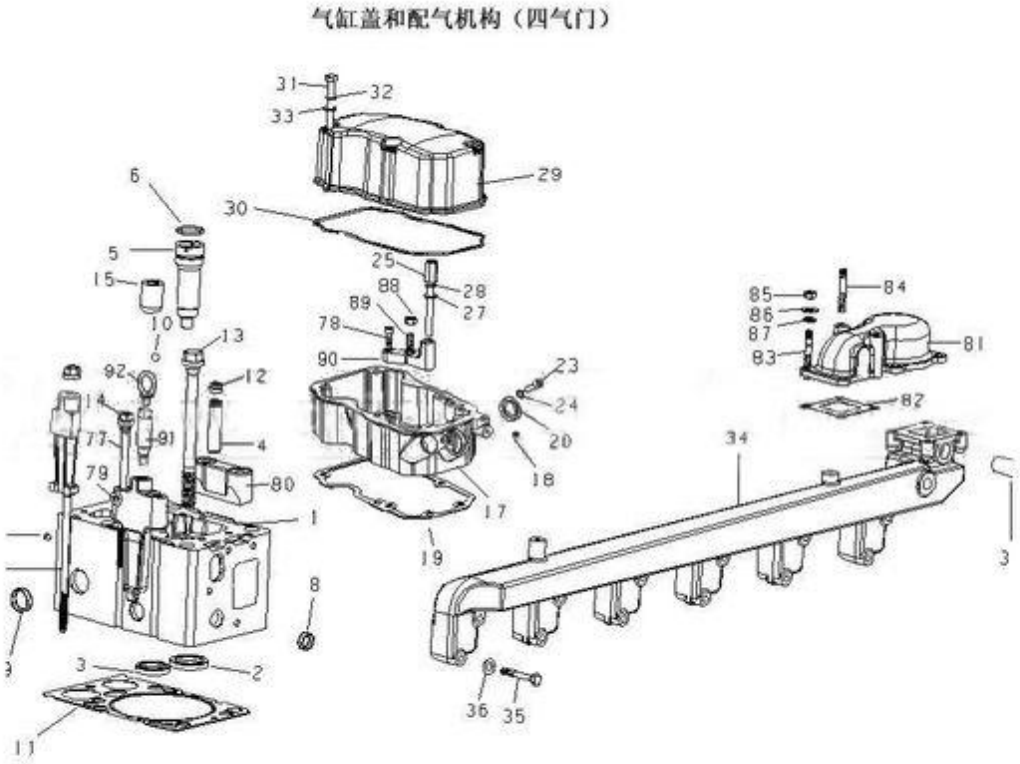

CYLINDER HEAD AND VALVE MECHANISM (FOUR VALVES), D10 ENGINE EURO-III		
Serial	Name	Number
1	Cylinder head	az1099040003a
2	Intake valve seat	vg1540040006
3	Exhaust valve seat	vg1540040007
4	Valve Guide	vg1540040008
5	Injector bush	vg1092040306
6	Bush injector seals	vg1540040010
7	Hole clogging	vg1540040011
8	Plug	90003989721
9	Plug	90003989294
10	Ball	90016210001
11	Cylinder head gasket	vg1540040015a

12	Valve stem seal sets	vg1540040016
13	Master cylinder head bolts	vg1500040023
14	Shoulder nut	vg1200040034
15	Clamp block	vg1200040023a
16	Clamp block	vg1200040027
17	Rocker cover under cover assembly	vg1099040020
18	Slotted cylindrical plug	q61506
19	Gasket	vg1099040022
20	Simmerrings	vg1540040022
23	Hexagon socket head screws	q218b0620
24	Spring washer	90014350003
25	Hex head bolts	vg1540040024
27	Flat Washers	90003930261
28	Spring washer	90003931102
29	Rocker cover cover	vg1099040019
30	Cover ring	vg1099040018
31	Intake pipe fastening bolts	vg14110064
32	Wave spring washers	90003932023
33	Flat Washers	q40108
34	Outlet pipe	vg1540040231
35	Hex head bolts	90003802455
36	Wave spring washers	90003932023
37	Fitting assembly	vg1500060045
38	Camshaft	vg1540050004
39	Camshaft Thrust Washer	vg14050133
40	Hex head bolts	90003802411
41	Camshaft timing gear	vg14050053
42	Pin	90003901409
43	Hex head bolts	90003802443
44	Valve push rod assembly	z61500050931
47	Valve tappet	vg1500050032
48	Valve rocker seat	vg1099050005
49	Hex head bolts	q150b1275tf2
50	Hex head bolts	q150b1275tf2
51	Valve bridge adjusting screw	vg1246050045
52	Ball Buttons	vg1246050046
53	Hex Bolts	q218b0610
54	Bowl ring	vg1540050023

55	Valve spring	vg1540050011
56	Air lock folder	vg1540050012
57	Valve spring retainer	vg1540050013
58	Exhaust valve	vg1540050014
59	Intake valve	vg1540050015
60	Intake valve rocker arm assembly	vg1540050032
61	Exhaust valve rocker arm assembly	vg1099050006
62	Intake valve bridge	vg1540050018b
63	evb Bridge exhaust components	vg1099050011
64	Valve clearance adjustment screw	vg14050010
65	Valve clearance adjustment nut	vg2130050065
66	Bush	vg1560050051
67	Intermediate gear	vg1560050052
68	Middle gear shaft	vg1540059031
69	Apron	vg1560050045
70	Cover	vg1560050046a
71	Hex head bolts	90003802411
72	Wave spring washers	90003932023
73	Seals	90003120602
75	Hex head bolt m10 × 80	vg1560050059
76	Middle gear spacer	vg1540059032
77	Head bolt	vg1500010185
78	Hexagon socket head screws	q218b0885
79	Clamp block	vg1099040014
80	Clamp block	vg1099040011a
81	Water tube	vg1540040232
82	Water takeover Gasket	vg1540040233
83	Stud	90003813429
84	Stud	90003813467
85	Hexagon nuts	90003871252
86	Wave spring washers	90003932023
87	Flat Washers	90014040007
88	evb adjusting nut	vg1246050056
89	evb adjusting bolt	vg1246050055
90	evb adjusting screw support	vg1099050007b
91	Bolt clamping block	vg1099040016
92	Screw rings	vg14010388

曲轴和飞轮

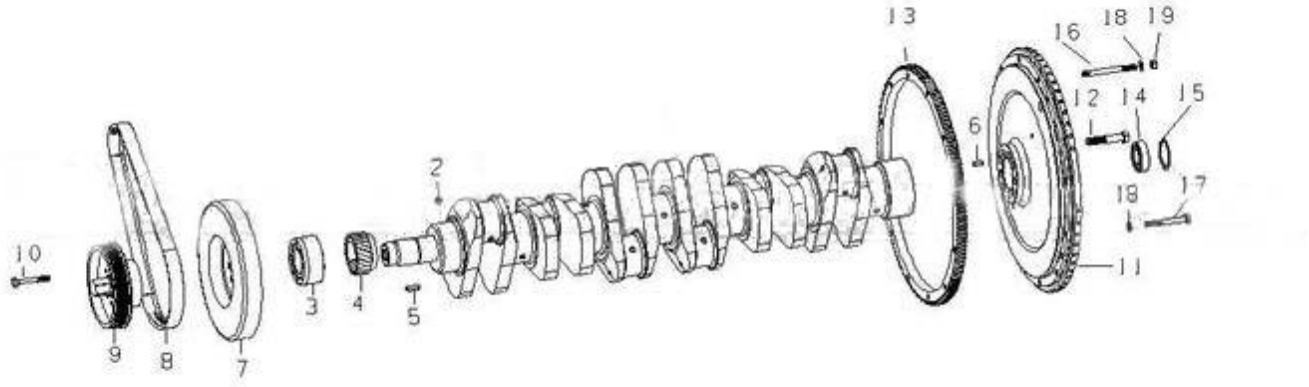

CRANKSHAFT & FLYWHEEL, D10 ENGINE EURO-III		
Serial	Name	Number
1	Crankshaft	61560020024
1	Crankshaft	61560020029
1	Crankshaft	61500020071
1	Crankshaft	61500020012
2	Plug	vg1560029001
3	Flange	vg1500020070
4	Crankshaft gear	vg14020038

5	Flat key	q5510828
6	Pin	90003901418
7	Shock Absorber	vg1560020010
7	Shock Absorber	vg1540020003
8	V-ribbed belt	vg2600020253
8	V-ribbed belt	vg1062060006
8	V-ribbed belt	vg1062060007
9	Pulley	vg1560020020
9	Pulley	vg1062020001
10	Hex head bolts	90003802558
11	Flywheel	az1540020205
11	Flywheel	r61540020204
11	Flywheel	az1092020003
12	Hex head bolts	vg1500020046
13	Flywheel Gear	vg2600020208
14	Radial Ball Bearings	90003311416
15	Hole circlip 62 × 2	90003934310
16	Wave spring washer b10	90003932024
17	Hex head bolts	90003800579
18	Stud	90003813571
19	Nuts	90003871305

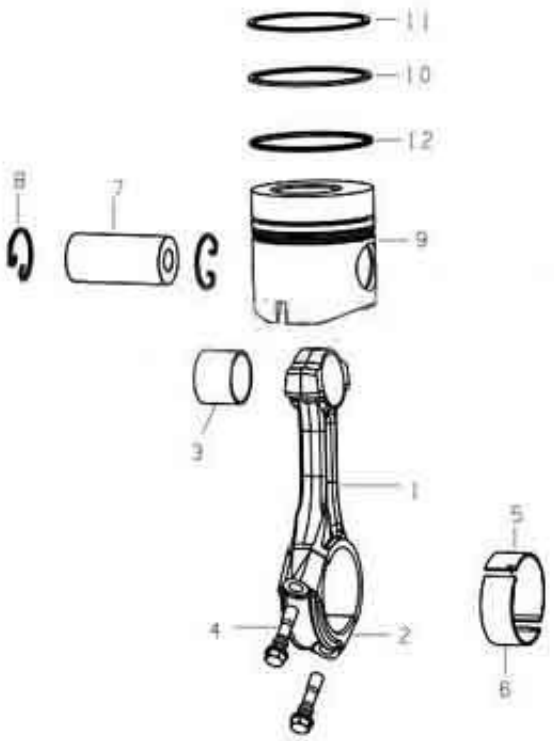

PISTON & CONNECTING ROD, D10 ENGINE EURO-III		
Serial	Name	Number
1	Connecting rod	161500030008
2	Rod cap	161500030022
3	Rod bushing	vg1500030077
4	Connecting rod bolt	vg1500030023
5	Upper bearing	vg1560037034
5	Upper bearing	vg1540030015
6	Lower bearing	vg1560037033
6	Lower bearing	vg1540030016
7	Piston pin	vg1560030013
8	Piston pin retainer	vg1560030012
9	Piston	vg1560037011
9	Piston	vg1560030004
9	Piston	vg1560030010
10	Cone ring	vg1540030006
11	Ring	vg1540030007
12	Oil ring	vg1560030045

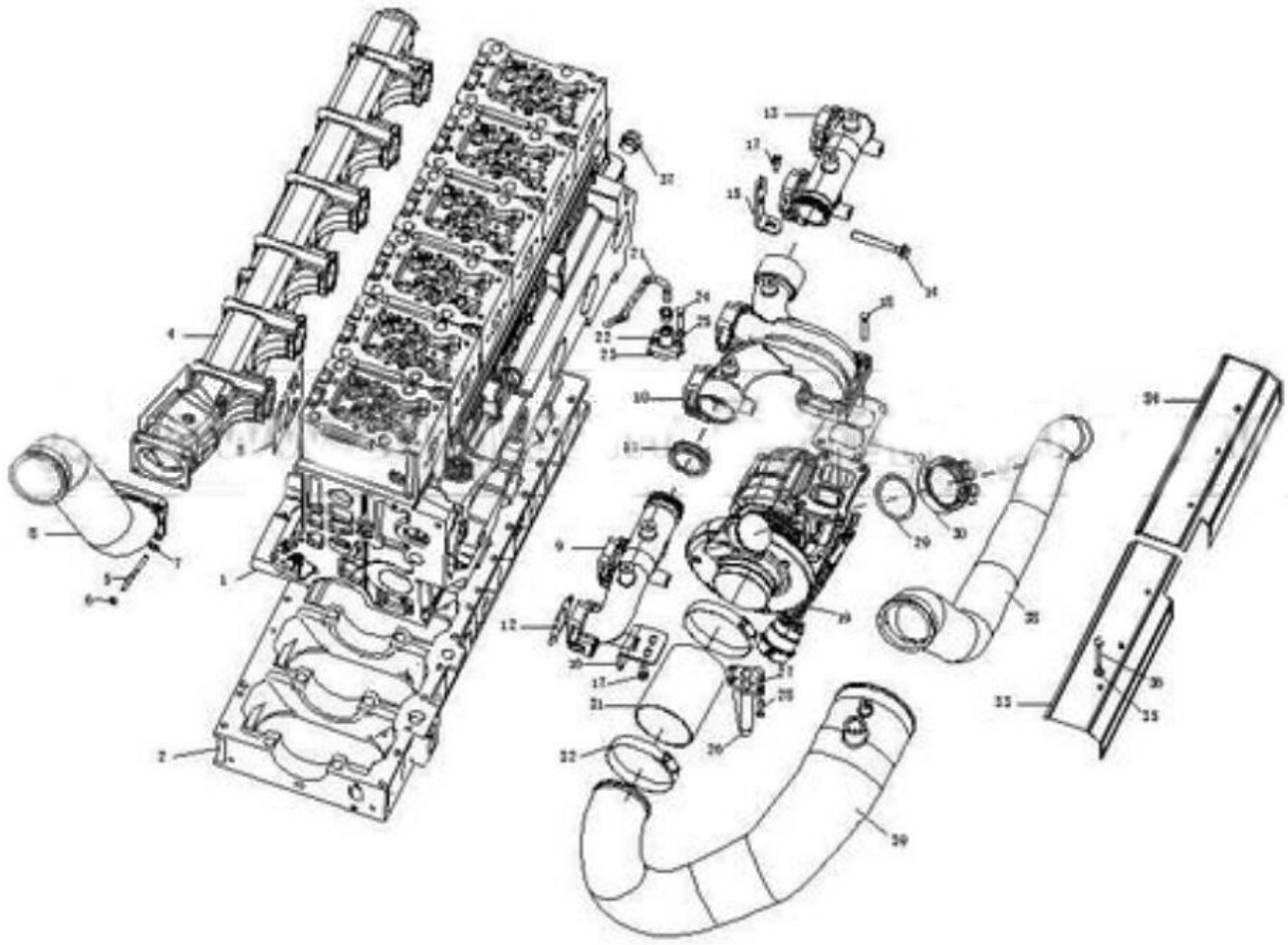

INTAKE & EXHAUST (TWO VALVES), D10 ENGINE EURO-III		
Serial	Name	Number
1	Cylinder body	az1095010010
2	Crankshaft case	161500010369
3	Intake manifold gasket	vg1500110024
4	Intake pipe	vg1540110036
5	Stud	q1201030f3
5	Stud	vg1560110187
6	Hex nuts	q340b10
7	Wave spring washers	q41810
8	Inlet connection	vg1095110100
9	First, two cylinder exhaust manifold	vg1540110145
10	Third, four-cylinder exhaust manifold	vg1540110146
11	Fifth, six-cylinder exhaust manifold	vg1540110147
12	Exhaust pipe sealing ring	vg1540110005

13	Exhaust pipe gaskets	vg1560110111
14	Exhaust pipe fastening bolts	vg1246110052
15	Support	vg1099110006
16	Support	vg1095110102
17	Hex head bolts	q150b0820
18	Hex head bolts	vg1560110241
19	Turbocharger	vg1034110051
20	Turbocharger Gasket	vg1560110210
21	Turbocharger inlet pipe	vg1095110015
22	Inlet pipe flange	vg1099110008
23	Inlet pipe gasket	vg609e110050
24	Hexagon socket head screws	90003862428
25	Self-locking washer	vg188250083
25	Self-locking nuts	190003888470
26	Turbocharger oil return pipe assembly	vg1095110025
27	Return pipe flange gasket	vg2600110048
28	Return pipe bolt	vg1460070014
29	Seals	vg190320035
30	Clips	vg1560110226
31	Rubber hose	vg9112530148
32	Hose clamps	190003989315
33	Front shrouds	vg1099110004
34	Shrouds	vg1099110005
35	Small Washers	190014320002
36	Heat shield bolt	vg2600110963
37	Hexagon head screw plugs	190003962051
38	Turbocharger coupling elbow	vg1099110002
39	Turbocharger intake pipe	vg1099110003

进排气部分（四气门中置）

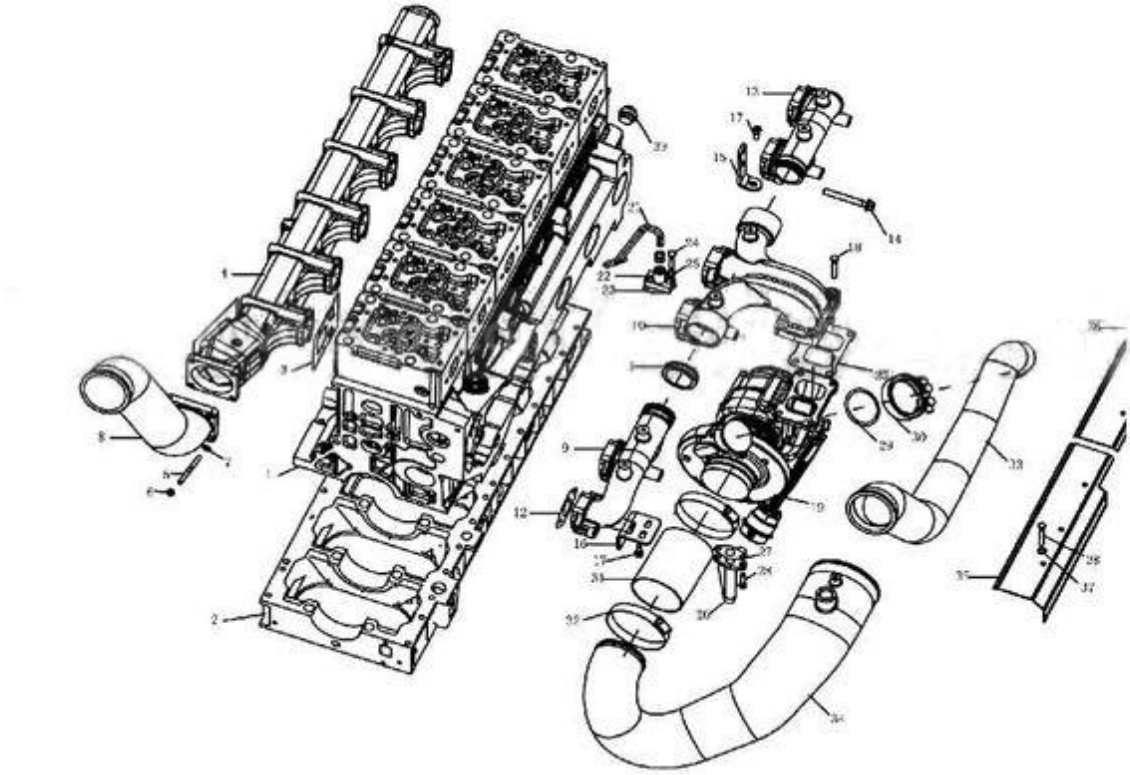

INTAKE & EXHAUST (FOUR VALVES), D10 ENGINE EURO-III		
Serial	Name	Number
1	Cylinder body	az1099010079
2	Crankcase	161500010369
3	Intake manifold gasket	vg1500110024
4	Intake pipe	vg1540110036
5	Stud	q1201030f3
6	Hex nuts	q340b10
7	Wave spring washers	q41810
8	Inlet connection	vg1095110100
9	First, two cylinder exhaust manifold	vg1540110145
10	Third, four-cylinder exhaust manifold	vg1540110146
11	Fifth, six-cylinder exhaust manifold	vg1540110147
12	Exhaust pipe sealing ring	vg1540110005
13	Exhaust pipe gaskets	vg1560110111

14	Exhaust pipe fastening bolts	vg1246110052
15	Support	vg1099110006
16	Support	vg1095110102
17	Hex head bolts	q150b0820
18	Hex head bolts	vg1560110241
19	Turbocharger	vg1099110012
20	Turbocharger Gasket	vg1540110017
21	Turbocharger inlet pipe	vg1099110009
22	Inlet pipe flange	vg1099110008
23	Inlet pipe gasket	vg609e110050
24	Hexagon socket head screws	90003862428
25	Self-locking washer	vg188250083
26	Turbocharger return pipe assembly	vg1099110011
27	Return pipe flange gasket	vg2600110048
28	Return pipe bolt	vg1460070014
29	Seals	vg190320035
30	Clips	vg1560110226
31	Rubber hose	vg1540110034
32	Hose clamps	90003989318
33	Turbocharger coupling elbow	vg1099110002
34	Turbocharger intake pipe	vg1099110003
35	Front shrouds	vg1099110004
36	Shrouds	vg1099110005
37	Small Washers	190014320002
38	Heat shield bolt	vg2600110963
39	Hexagon head screw plugs	190003962051

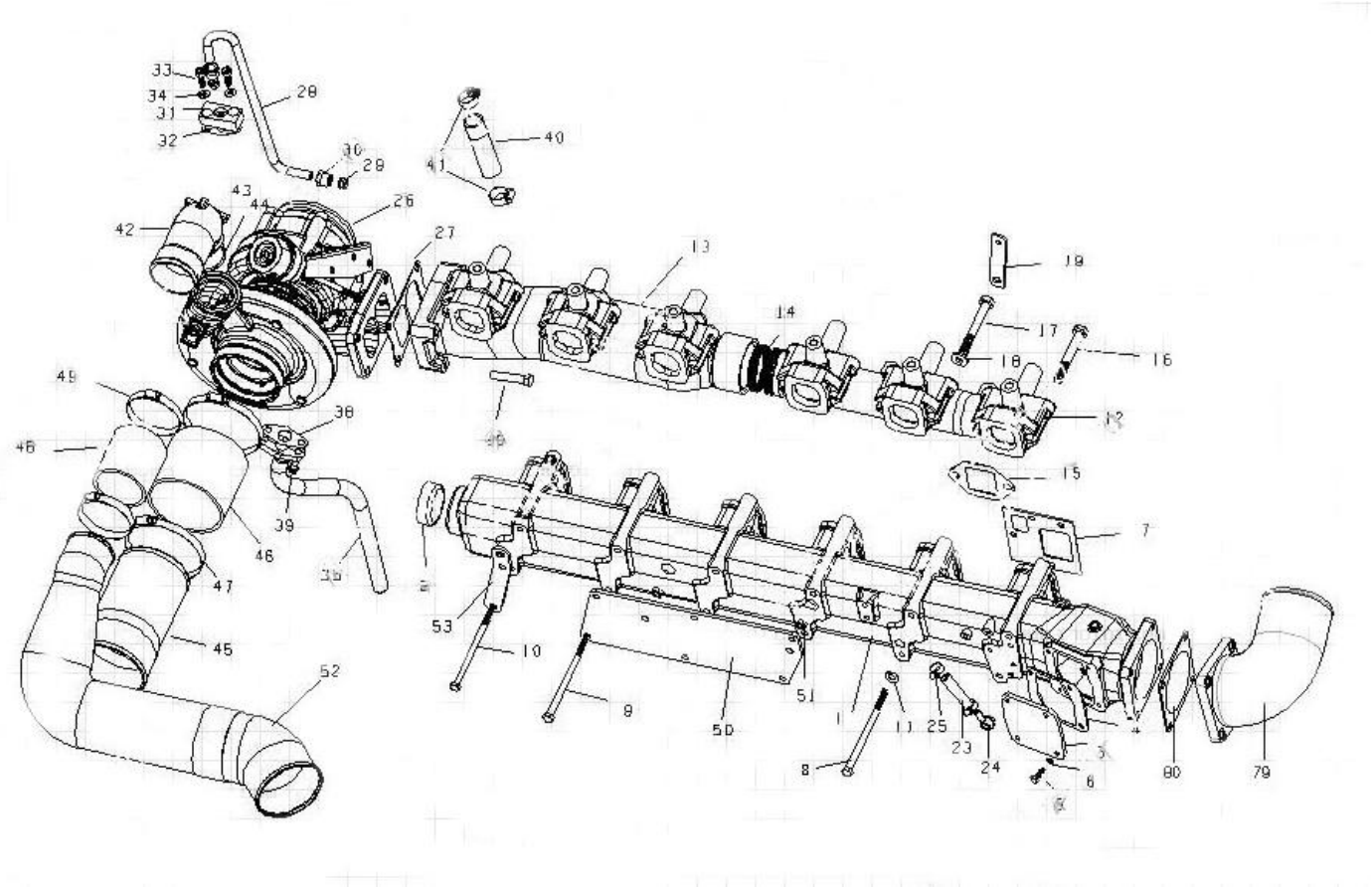

INTAKE & EXHAUST (REAR POSITION), D10 ENGINE EURO-III		
Serial	Name	Number
1	Intake pipe	VG1540110043
2	Plug	90003989286
3	Intake manifold cover	VG1540110011A
4	Intake manifold cover gasket	VG1540110018A
5	Hex head bolts M6 × 20	90003802331
6	Wave spring washers	90003932008
7	Intake manifold gasket	VG1500110024
8	Hex head bolts	VG1540110025
9	Hex head bolts	90003800497
11	Wave spring washers	90003932023
12	Front exhaust manifold	VG2600111137
12	Front exhaust manifold	VG1540110201
12	Front exhaust manifold	VG2600111290
12	Front exhaust manifold	VG1540110003

13	Rear the exhaust manifold	VG2600111136
13	Rear the exhaust manifold	VG1500110123
13	Rear the exhaust manifold	VG1540110202
13	Rear the exhaust manifold	VG2600111280
13	Rear the exhaust manifold	VG2600110855
13	Rear the exhaust manifold	VG1540110004A
14	Exhaust pipe sealing ring	VG2600110162
15	Exhaust pipe gaskets	VG1560110111
16	Exhaust pipe fastening bolts	VG2600111052
19	Support	VG1047110105
20	Stud M10 × 48DIN939	VG2600111429
20	Stud M10 × 45DIN939	VG2600111428
21	Hex head bolts	VG1560110241
21	Hex head bolts	Q150B0615
22	Spring washer	90014350003
23	Hose coupling	VG1540110035
24	Fittings	VG1540110038
25	Hose clamps	90003989300
26	Turbocharger	VG1034110061
26	Turbocharger	VG1029110060
26	Turbocharger	VG1540110066
26	Turbocharger	VG1029110070
26	Turbocharger	VG1034110071
26	Turbocharger	VG1540110006
26	Turbocharger	VG1027110081
26	Turbocharger	VG1029110081
26	Turbocharger	VG1034110081
27	Turbocharger Gasket	VG1560110210
28	Turbocharger inlet pipe	VG1560070002A
28	Turbocharger inlet pipe	VG1560070004A
28	Turbocharger inlet pipe	VG1092110024
28	Turbocharger inlet pipe	VG1560070013
28	Turbocharger inlet pipe	VG1500079015
28	Turbocharger inlet pipe	VG1540110013A
28	Turbocharger inlet pipe	VG1500079022
28	Turbocharger inlet pipe	VG1500119023
29	Clamp	90003559563
30	Nuts	90003559513

31	Inlet pipe flange	VG1560110152
32	Inlet pipe gasket	VG609E110050
33	Hexagon socket head screws	90003862428
34	Self-locking washer	VG188250083
35	Turbocharger return pipe assembly	VG1560079003
35	Turbocharger return pipe assembly	VG1560079006
35	Turbocharger return pipe assembly	VG1540110205
35	Turbocharger return pipe assembly	VG1560070040
35	Turbocharger return pipe assembly	VG1560079361
35	Turbocharger return pipe assembly	VG1560070046
38	Return pipe flange gasket	VG2600110048
39	Return pipe bolt	VG1460070014
40	Turbocharger oil return hose	VG2600070071
41	Hose clamps	90003989301
42	Elbow coupling	VG1800110045
43	Clips	VG1560110226
44	Seals	VG190320035
48	Silicone tube	VG1047110103
49	Strong clamps	VG9003980003
50	Rail bracket	VG1540110016A
51	Hexagon weld nut M8	M8DIN929
52	Intercooler pipe assembly	VG1047110104
52	Intercooler pipe assembly	VG1047110100
52	Intercooler pipe assembly	VG1500119051
52	Intercooler pipe assembly	VG1500119008
52	Intercooler pipe assembly	VG1540110027A
52	Intercooler pipe assembly	VG1087110001
52	Intercooler pipe assembly	VG1069110001
56	Clamps	VG1560110021
56	Clamps	VG1560110029
57	Hex head bolts	90003802419
58	Wave spring washers	90003932023
59	Tensioning pin	VG209190017

60	Tensioning pin	VG1700550013
61	Hexagon socket head screws	AZ90003862462
62	Harness Bracket	VG1540110053C
63	Elbow coupling	VG2600111078
64	Hex head bolts	90003802411
65	Wave spring washers	90003932023
66	Fixing plate	VG1047110102
67	Hex head bolts	90003802415
68	Wave spring washers	90003932023
70	Front shrouds	VG2600111144
71	Shrouds	VG2600111145
72	Large Washer	90003936109
73	Heat shield bolt	VG260110962
74	Harness lower bracket	VG1096119055
75	Exhaust takeover	VG1500119020
76	Stud	VG1560110187
77	Self-locking nuts	190003888470
78	Exhaust heat shield takeover	VG1092110031
79	Inlet connection	VG1540110023
80	Inlet connection pads	VG1560110180

水泵和冷却系统

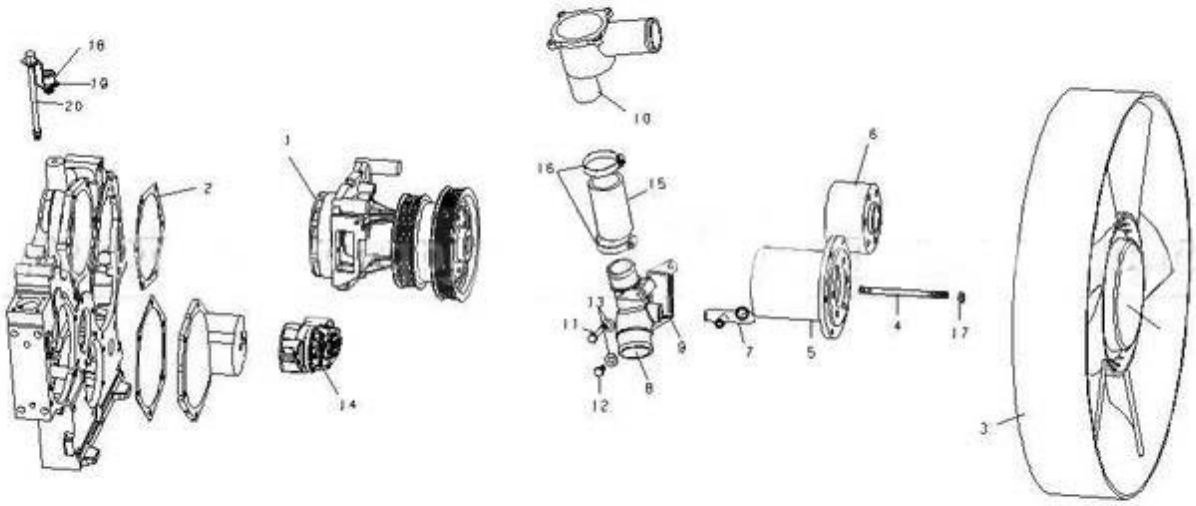

WATER PUMP & COOLING SYSTEM, D10 ENGINE EURO-III		
Serial	Name	Number
1	Water Pump Assembly	vg1500060051
2	Pump Seal	vg140608
3	ϕ640 annular fan	vg2600060446
3	ϕ590 annular fan	vg1500060447
3	ϕ704 annular fan	vg1099060201
4	Stud	90003813148
5	Intermediate flange	vg1500060240
6	Intermediate flange	vg1038060002
7	Fitting assembly	vg1560060004
8	Hose Connector	vg1560060023
9	Hose Connector Gasket	vg14060024
10	Thermostat assembly (80 degrees)	vg1096069601
10	Thermostat assembly (80 degrees)	vg1099060001
10	Thermostat assembly (71 degrees)	vg1096069602
10	Thermostat assembly (71 degrees)	vg1099060004

11	Hex head bolts	90003800467
12	Hex head bolts	90003802424
13	Wave spring washer	90003932023
14	Automatic tensioning wheel	vg2600060313
15	Hose	vg1096060033
16	Hose hoop	90003989308
17	Type 2 all-metal hexagon nuts	90003888452
18	Hexagon socket head screws	q218b1625
19	Spring washer	190003931182
20	Pump butter means	vg2600060456

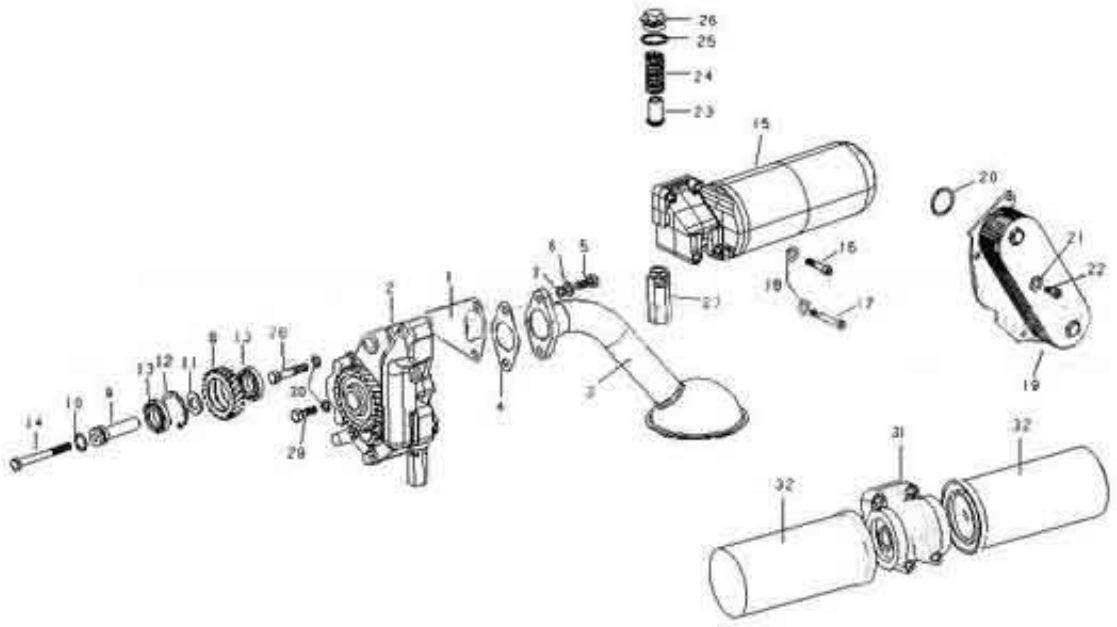

OIL PUMP & FILTERS, D10 ENGINE EURO-III		
Serial	Name	Number
1	Oil pump gasket	vg14070055
2	45mm oil pump assembly	vg1500070021
3	Oil gathering set	vg1800070051
4	Gasket	vg140778
5	Hex head bolts	90003802523
6	Gasket	90003930271
7	Spring washer	90003931122
8	Pump intermediate gear	vg14070061
9	Intermediate gear shaft	vg14070056
10	Seals	vg14070155
11	Spacer ring	vg14070049
12	Retaining ring	90003934732
13	Radial Ball Bearings	90003311410
14	Hex head bolts	90003802578
15	Oil filter assembly	vg1540070005
16	Hexagon socket head screws	90003862443
17	Hexagon socket head screws	90003862482

18	Wave spring washers	90003932023
19	Oil cooler	vg1500010334
20	Seals	vg1400010032
21	Hexagon socket head screws	90003862419
22	Wave spring washers	90003932023
23	Safety valve	vg14070069
24	Safety valve spring	vg14070068
25	Composite washer	vg2600010735
26	Hexagon head screw plugs	90003962051
27	Oil pressure limiting valve assembly	vg1500070097
28	Hex head bolts	90003800551
29	Hex head bolts	90003802527
30	Spring washer	90003931122
31	Oil filter base assembly	vg1500070051
32	Oil filter cartridge	vg61000070005

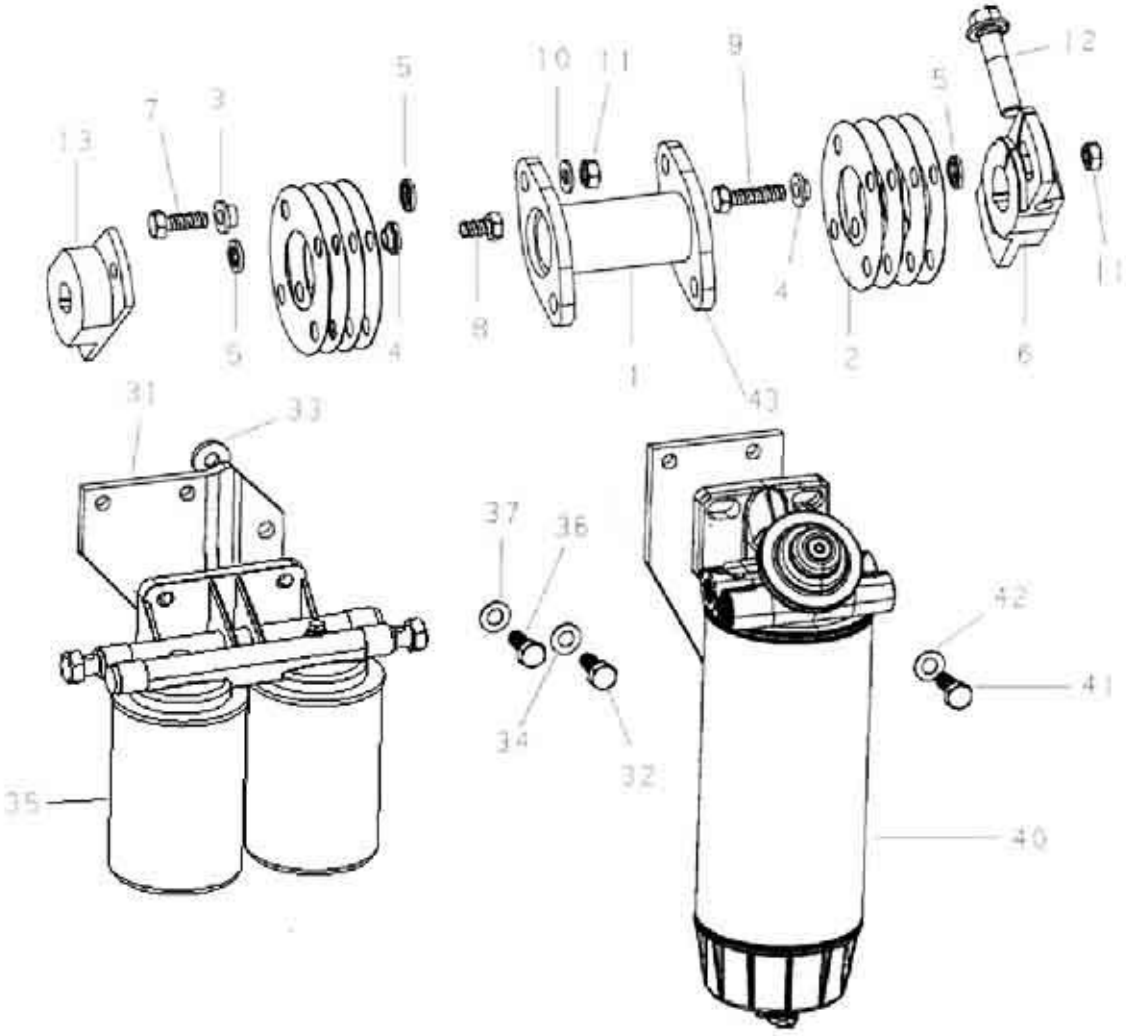

FUEL SUPPLY, D10 ENGINE EURO-III		
Serial	Name	Number
1	Coupling flange assembly	VG1540080299
2	Flexible connection piece	VG1540080004B
3	Bush	VG1540080295
4	Bush	VG1540080296
5	Washer	VG1540080007B
6	Adjustment plate	VG1540080293
7	Hex head bolts	90003802544
8	Hex head bolts	90003802513
9	Hex head bolts	90003802536
10	Washer	VG1540080297
11	Hex nuts	90003871308
12	Hexagon flange bolts	VG1500089018

13	Flange	VG1540080292A
14	Fastening nut	R61540080311
15	Oil supply pump	R61540080101
16	Key	R61540080312
17	Spring washer	90014350010
18	Hexagon socket head screws	VG1540080091
19	Flat Washers	90003930261
20	Self-locking washer	VG188250083
21	Rail component	R61540080016
22	Hex head bolts	90003802455
23	Spring washers	90003932023
24	Injector assembly	R61540080017A
24	Injector assembly	VG1096080010
25	Injector seals	VG1096080003
26	Injector Washers	VG1540080019B
26	Injector Washers	VG1540080018A
27	Seals	VG1540080095
28	Injector clamping block	VG1540080021C
28	Injector clamping block	VG1096080021
29	Hex head bolts	Q150B0835TF2
29	Hex head bolts	Q150B0840TF2
30	Washers	VG1540080024
31	Fuel filter bracket	VG1540080126
32	Hex head bolts	90003802523
33	Large Washer	90003930012
34	Wave spring washers	90003932024
35	Fuel fine filter assembly	VG1540080030A
36	Hex head bolts	90003802527
37	Spring washer	90003931122
38	Diesel filter spill valve	VG1540080022
39	Gasket	VG2600080200
40	Primary fuel filter assembly	VG1540080132A
41	Hex head bolts	90003802523
42	Spring washer	90003931122
43	Coupling assembly	VG1540080300
44	Hollow bolt A8M14 × 1.5	90003962621
45	Gasket	VG2600080200
46	Pump inlet pipe	VG1099089156

47	Fuel Pipe	VG1099089098
48	Fuel Pipe	VG1099089099
49	Hollow bolt A8M14 × 1.5	90003962621
50	Gasket	VG2600080200
51	High-pressure pipeline	VG1540080040
51	High-pressure tubing assembly	VG1096080400
52	Single pipe clamp assembly	VG1540080057
53	Single tube clip	VG1540080048
54	Single pipe clamp pad	VG1540080049
55	Double pipe clamp assembly	VG1540080058
56	Double tube clip	VG1540080052
57	Double pipe clamp pad	VG1540080053
58	Tube clip topsheet assembly	VG1540080059
59	Tube clip	VG1540080055
60	Pipe clamp pad	VG1540080056
61	Hex head bolts	90003802331
62	Spring washer	90014350003
63	High-pressure tubing assembly (1)	VG1540089093
63	High-pressure tubing assembly (1)	VG1096080321
64	High-pressure tubing assembly (1)	VG1096080322
65	High-pressure pump lubricating oil pipe assembly	VG1560070060
65	High-pressure pump lubricating oil pipe assembly	VG1540089094
66	Hollow bolt	90003962607
67	Gasket	90003098010
68	Lubricating oil return pipe assembly	VG1540089097
69	Hollow bolt	90003962621
70	Gasket	VG2600080200
71	Pin	VG1096080022
73	Gasket	VG2600080201
74	Injector return pipe assembly	VG1099089066
74	Injector return pipe assembly	VG1096080310A
75	Hollow bolt	VG1096080081
76	Hollow bolt	190003962603
76	Hollow bolt	VG1540080081
77	Composite gasket	VG9003080003
78	Fuel temperature sensor seat	VG1540080067
79	Hex head bolts	Q150B0645
80	Spring washer	90014350003

81	Flat Washers	90014330002
82	Fixing plate	VG1540080298
83	Hex head bolts	90011350026
84	Spring washer	90003931122
85	Flat Washers	90003930271
86	Oil return connection seat	VG1540080071
87	Hex head bolts	Q150B0645
88	Spring washer	90014350003
89	Flat Washers	90014330002
90	Return pipe	VG1540080072
91	Hollow bolt	90003962603
92	Gasket	VG2600080201
93	Rail assembly return pipe	VG1096080073
93	Rail assembly return pipe	VG1540089073
94	Hollow bolt A4M10 × 1	90003962607
95	Gasket	90003098010
96	Diesel filter return pipe	VG1099089074
97	Hollow bolt A8M14 × 1.5	90003962621
98	Gasket	VG2600080200
99	Pump return pipe	VG1540089096
100	Hollow bolt A8M14 × 1.5	90003962621
101	Gasket	VG2600080200
103	Hollow bolt A8M14 × 1.5	90003962621
104	Gasket	VG2600080200
105	Clamps	90003171697
106	Support bracket (a)	VG1540080076A
106	A support frame (b)	VG1540080077
106	Support frame (c)	VG1540080078A
106	Support bracket (D)	VG1540080079
106	Support bracket (D)	VG1096080314
107	Support frame (c)	VG1096080313
108	Support bracket (D)	VG1540080079
109	Support frame (c)	VG1540080078A
110	Hexagon nut	90003871252
111	Wave spring washers	90003932023
112	Injector short oil return tube assembly	VG1099089065
113	Connector	VG1099089064

电器系统

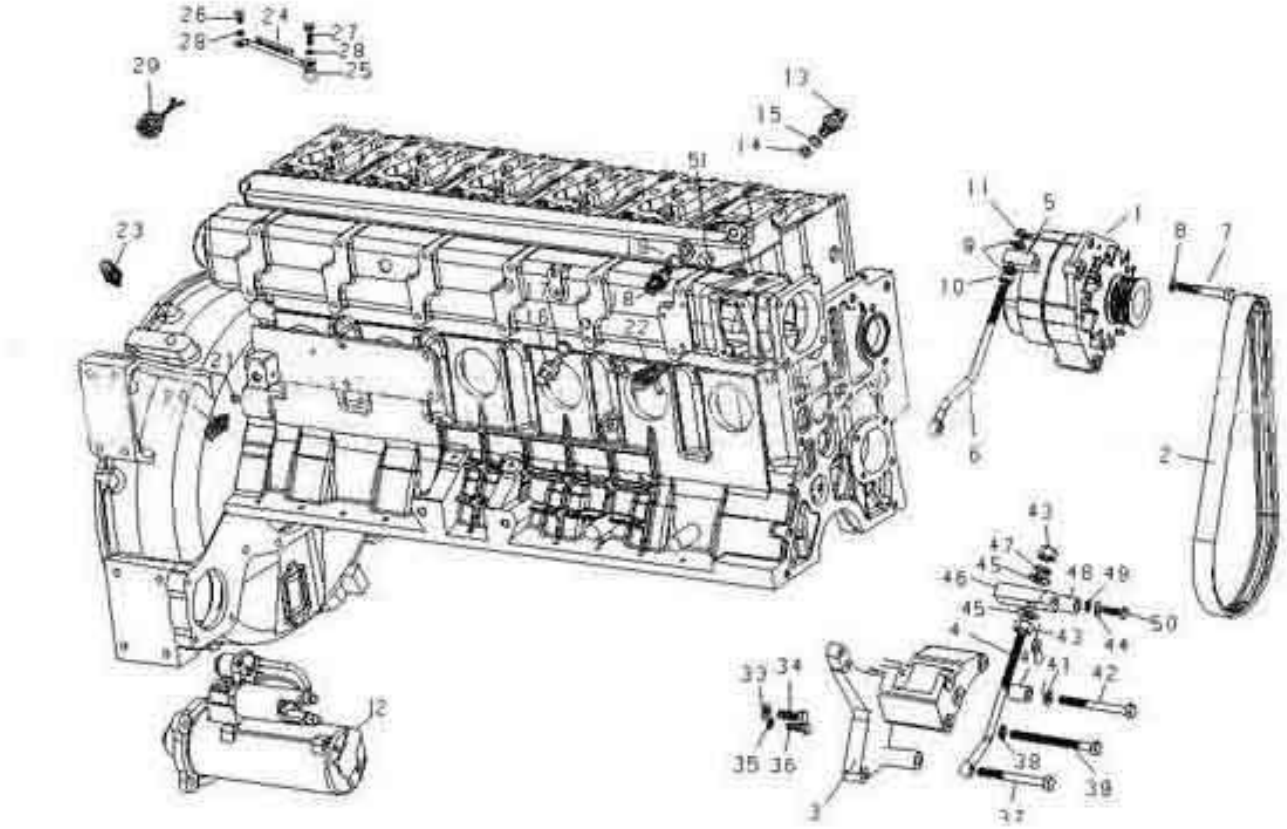

ELECTRONIC SYSTEM, D10 ENGINE EURO-III		
Serial	Name	Number
1	1.5kw alternator	vg1560090011
2	Generator ribbed belt	vg1500090066
3	Air conditioning bracket	vg1500130018
4	Tension bolt	vg1500090026
5	Tensioning block	vg1500090027
6	Tension bolt	vg1500090018
7	Hex head bolts	90003800564
8	Saddle-shaped spring washers	90003932025
9	Flat Washers	90003935125
10	Hexagon nut	90003871305
11	Hexagon nuts	90003888452
12	Starter	vg1560090001
13	Electronic oil pressure sensor	vg1092090311
13	Electromechanical oil pressure sensor	vg1500090060

14	Composite gasket	vg2600080275
15	Flat Washers	90003930261
16	Intake air temperature sensor	r61540090003
17	Gasket	q72316t3m
18	Water temperature sensor	r61540090004
20	Diesel temperature sensor	r61540090005
21	Sensor ring	r61540090006
22	Intake pressure sensor	r61540090007
23	Crankshaft speed sensor	r61540090008
24	Harness Bracket	vg1099090033
25	Bolt bushing	vg1099090034a
26	Hex head bolts	90003802307
27	Hex head bolts	q150b0640
28	Spring washer	90014350003
29	Monaural injector wire	vg1099090004
30	ecu control assembly	r61540090002
31	Wiring assembly	vg1095090009
32	Supporting frame	vg1540090091a
33	Flat Washers	90003930271
34	Hex head bolts	90003802527
35	Flat Washers	90014040007
36	Hex head bolts	90003802424
37	Hex head bolts	90003800568
38	Small Washers	90014070002
39	Hex head bolts	90003800575
40	Bush	vg1500130019
41	Saddle spring washer	90003932025
42	Hex head bolts	90003800568
43	Hexagon nut	90012630006
44	Wave spring washers	90003932023
45	Flat Washers	90003935015
46	Spacers	vg1500130027
47	Wave spring washers	90003931162
48	Bushings	vg581c60018
49	Small Washers	90003932309
50	Hex head bolts	90003802424
51	Water temperature sensor	vg1500090061
52	Water temperature sensor cover	vg2600090318

双缸水冷空压机

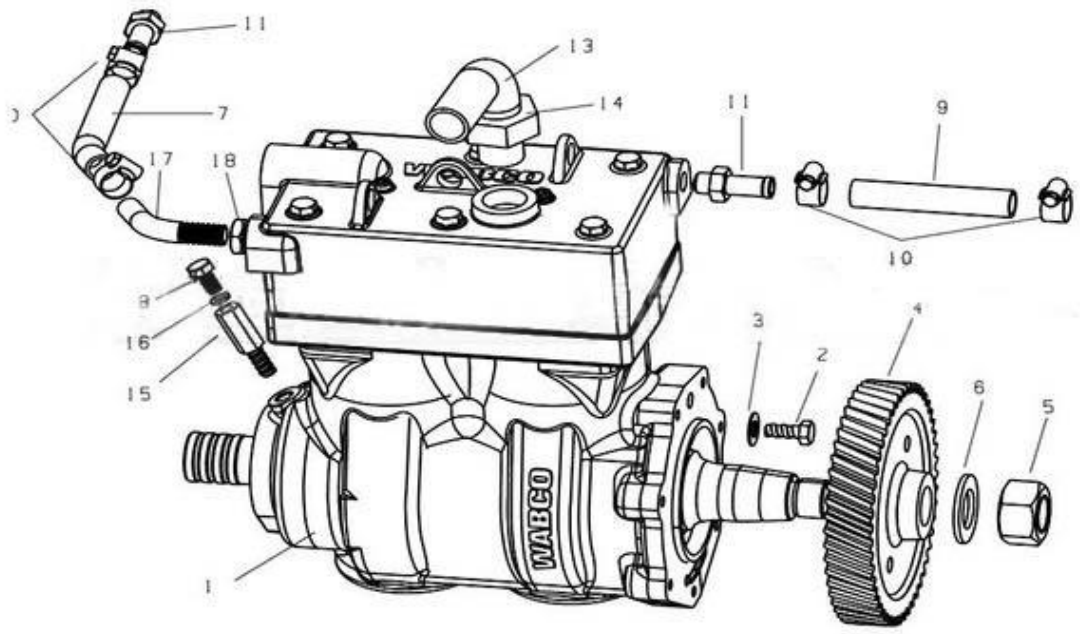

AIR COMPRESSOR, D10 ENGINE EURO-III		
Serial	Name	Number
1	Air compressor	vg1099130010
2	Hex head bolts	q150b0820tf2
3	Wave spring washers	90003932023
4	Injection pump gear	vg1560130064
5	Hex nuts	vg2600130045
6	Gasket	vg409020045
7	Compressor inlet	vg1092060010
8	Hollow bolt	vg2600130053
9	Compressor outlet pipe	vg1560060019
10	Hose clamps	90003989336
11	Air compressor water joint	vg2600130026
13	Air compressor intake pipe joint	vg1560130035
14	Hex nuts	90003559778
15	Transition joints	vg1560070051
16	Composite gasket	vg9003080003
17	Compressor inlet connector	vg1560060012
18	Hexagon thin nuts	q351b14

油底壳部分

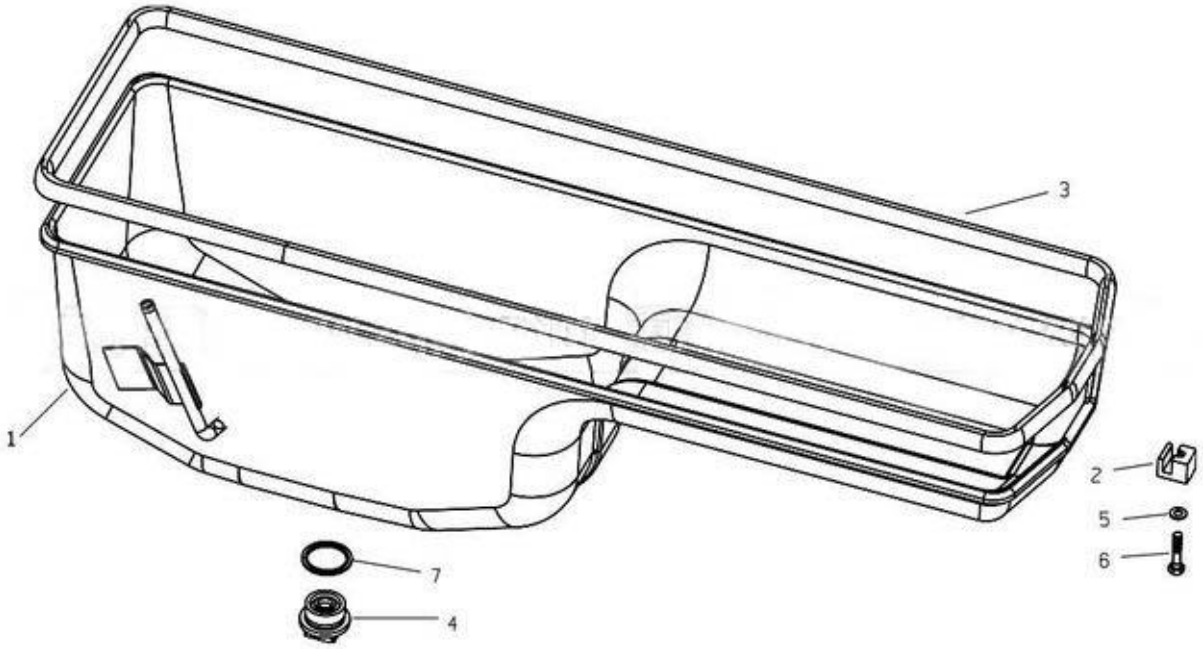

OIL PAN, D10 ENGINE EURO-III		
Serial	Name	Number
1	Oil pan	vg1800150015a
2	Oil pan support	vg14150046
3	Seal	vg14150004
4	Magnetic plug assembly	vg2600150108
5	Flat Washers	90003930261
6	Hex head bolts	90003802442
7	Gasket	vg2600150106

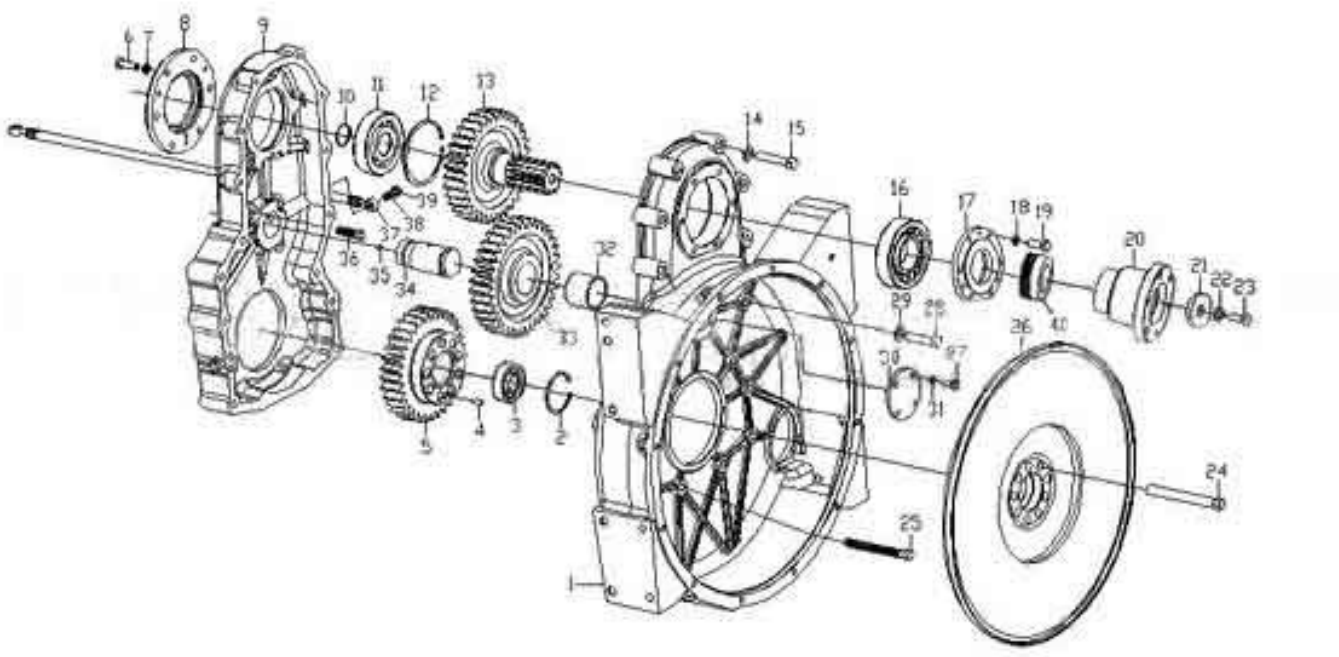

PTO, D10 ENGINE EURO-III		
Serial	Name	Number
1	Flywheel housing	az1500019035
2	Hole circlip	190003934310
3	Bearing	190003311416
4	Locating Pins	190003901418
5	Crankshaft gear	vg1500019014
6	Hex head bolts	190003802527
7	Spring washer	190003931122
8	Bearing cap	vg1500019024
9	PTO housing	az1500019031
10	Shaft circlips	190003933251
11	Rolling	az9003320122
12	Hole circlip	190014570001
13	Output gear	vg1500019015a
14	Wave spring washers	190003932016
15	Hex head bolts	190011350066
16	Rolling	az9003320120
17	Seal seat	vg1500019023a
18	Spring washer	190003931122

19	Hex head bolts	190003802527
20	Output flange	vg1500019025a
21	Output flange fastening plate	vg1500019026
22	Spring washer	190003931162
23	Hex head bolts	190011270032
24	Hex head bolts	vg1500029046
25	Bolts	vg1500019027
25	Bolts	vg1500019012
25	Bolts	vg1500019011
26	Flywheel	az1500029041
26	16-hole flywheel	az1500029023
27	Hex head bolts	190003802419
28	Hex head bolts	190011350058
29	Wave spring washers	190003932016
30	Middle gear shaft cover	vg1500019022
31	Spring washer	190003931102
32	Bush	vg1500019017
33	Middle gear	vg1500019016
34	Middle gear shaft	vg1500019033
35	Hole plug	vg1500019034
36	Bolts	vg1500019028
37	Lubricating oil pipe assembly	vg1500019029
38	Composite gasket	vg9003080003
39	Hollow bolt	190003962607
40	Seal bush	vg1500019040