SINOTRUK

D10, EURO IV ENGINE SPARE PARTS CATALOG

https://www.sinosoon.com Email:market@sinosoon.com

INDEX

CYLINDER BODY	Page 3
CRANKSHAFT & FLYWHEEL	Page 7
PISTON & CONNECTING ROD	Page 8
CYLINDER HEAD & VALVE	Page 9
WATER PUMP & COOLING SYSTEM	Page 12
OIL PUMP & FILTERS	Page 14
FUEL SUPPLY	Page 16
ELECTRONIC SYSTEM	Page 20
INTAKE & EXHAUST	Page 22
TURBO INTAKE & EXHAUST	Page 25
WATER COOLING AIR COMPRESSOR	Page 27
OIL PAN	Page 29
REAR PTO	Page 30
SCR system	Page 32

气缸体部分 Cylinder Block

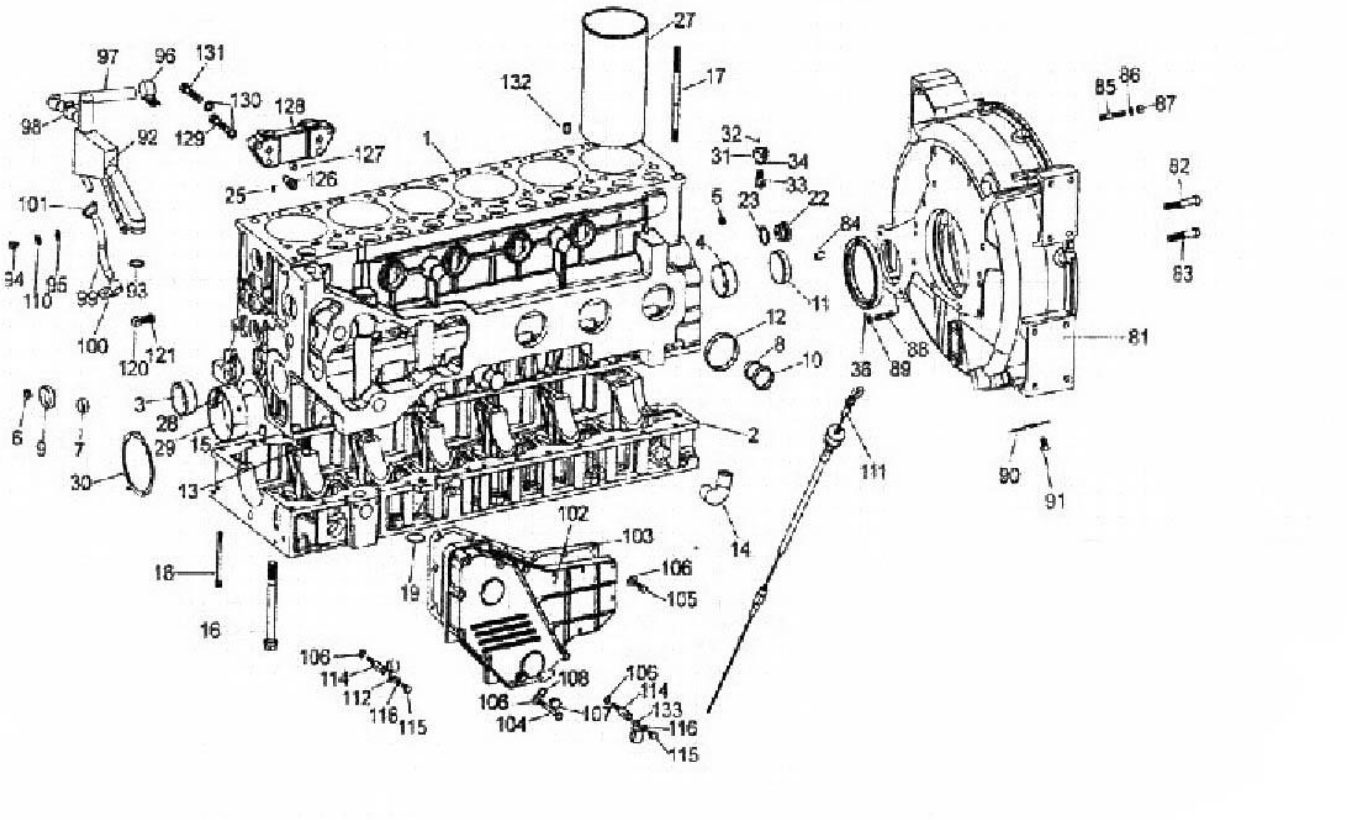

Serial	Part Number	Name in Eng
	AZ10960101900	Cylinder block assembly
	AZ1095010020A	Cylinder block assembly
1	AZ1096010134A	cylinder block
1	AZ1095010010A	cylinder block
2	61500010366C	Crankcase
2	61500010369	Crankcase
3	VG2600010990	Camshaft bushings
4	VG1560010029	Camshaft bushings
5	90003984080	Bowl plug 17x7.3
6	90003989480	Bowl plug 17x8
7	90003989204	Bowl plug 28x12
8	90003989289	Bowl plug 40x12
9	90003982121	Bowl plug 45x12
10	90003989215	Bowl plug 45x12
11	90003989288	Bowl plug 65x14
12	90003989210	Bowl plug 75x14
13	VG14010217	Main bearing bolts

14	VG2600070097	Return to the elbow
15	90003901604A	Cylindrical pin
15	Q5211220	Cylindrical pin
16	VG14010114	Main bearing bolts
17	VG1500010185	Cylinder head bolts
18	90003802493	Hex head bolt
19	VG1400010032	Sealing ring
22	VG1460070011	Rear main oil line plug
23	VG2600010735	Composite washer
24	190003900085	Elastic cylindrical pin
25	90003909626	Elastic cylindrical pin
26	90003962051	Hex head plug
27	VG1540010006	Cylinder liner
28	VG1540010021	Main bearing tile
29	VG1540010022	Main bearing bush
30	VG1500010125	Throttle to pay
31	VG1560010090	Oil nozzle assembly
31	VG2600010659	Oil nozzle assembly
32	90003909603	Elastic cylindrical pin
33	90003962621	Hollow bolt
34	VG9003080001	Gasket
35	VG1500010038	Front oil seal
36	VG1047010050	Rear oil seal assembly
37	61557010008	Gear room
38	90003802523	Hex head bolt
39	90003802561	Hex head bolt
40	90003802571	Hex head bolt
41	90003931122	Spring washer
42	VG288730061	O-ring
43	90003901507	Cylindrical pin
44	VG61000010134	Sealing ring
45	VG2600010928	Front oil seal seat
46	VG2600010934	Front oil seal seat gasket
47	90011260039	Hex head bolt
48	90003900085	Elastic cylindrical pin
49	90003813628	Studs
50	90003813638	Studs
51	90003888453	hex nut
52	90003813429	Studs

53	90003813470	Studs
54	90003871252	Type Ⅰ hex nut
55	90003932023	Wave-shaped washer
57	VG1560010069	Air compressor gear cover
57	VG1062010169	Air compressor gear cover
58	VG14010040	Air compressor gear cover gasket
59	90003813429	Studs
60	90003871252	Type Ⅰ hex nut
61	90003932023	Wave-shaped washer
62	90003802576	Hex head bolt
63	90003932024	Wave-shaped washer
64	VG1500010008A	Camshaft gear cover
65	VG14010070	Camshaft gear cover gasket
66	90003862524	Cylindrical head cap screws
67	90003932025	Saddle elastic washer
68	90003813443	Studs
69	90003813429	Studs
70	90003871252	Type 1 hex nut
71	90003932023	Wave-shaped washer
72	90003901507	Cylindrical pin
73	VG1560010028	Fuel spool assembly
	VG1500019039	Fuel pipe assembly
74	VG14010086	Short tube gasket
75	90003802321	Hex head bolt
76	90003931082	Light spring washer
77	VG1500010079	Rubber hose with fiber sandwich
78	90003989306	Hose clamps
79	VG2600010919	Fuel filler tube assembly
80	VG2600010489	Fuel filler tube cover assembly
81	R61540010010	Flywheel shell
82	VG1500010062	Flywheel shell bolt
83	VG1500010101	Flywheel shell bolt
84	90003901604	Cylindrical pin
85	90003813537	Studs
85	Q1201045F3	Studs
86	90003931122	Spring washer
87	90003871305	Type 1 hex nut
88	90003813527	Studs
89	90003888452	2 all-metal hex nut

90	VG1800210011	Watch the hole cover
91	90003802511	Hex head bolt
92	VG1095010050	Oil and gas separator assembly
93	Q734B2650265	O-ring rubber seals
94	Q150B0820	Hex head bolt
95	Q40108	Flat Washers
96	VG31100040007	Pipe clamp
97	VG12G00040038	Rubber hose
98	90003989301	Hose clamps
99	VG2600011106	Rubber hose
100	VG609E110049	Fixed rebel
101	190003989336	Clamp
102	VG1557010014	Oil cooler cover
103	VG1540010015A	Oil cooler cover gasket
104	90003800467	Hex head bolt
105	90003802437	Hex head bolt
106	90003932023	Wave-shaped washer
107	90003962020	Hex head plug
109	VG2600010705	Oil dipstick tube lower components
109	VG1500019077	Oil dipstick tube lower components
110	Q40308	Spring washer
111	VG1500010600	Oil dip tube assembly
111	VG1500010500	Oil dip tube assembly
112	VG1500019067	Pipe clamp
114	VG1500010031	Support block
115	90003802411	Hex head bolt
116	90003931102	Spring washer
124	VG9100590006	Left bracket assembly
124	VG1095060116	Left bracket assembly
125	VG9100590009	Right bracket
125	VG1095060119	Right bracket
126	VG2600130026	Water-cooled air compressor pipe joints
127	Q5211216	Cylindrical pin
128	VG1540010019	Pump bracket
129	90003802650	Hex head bolt
130	90003931142	Spring washer
131	90011350045	Hex head bolt
132	190003901604	Cylindrical pin
133	VG1500019067	Pipe clamp

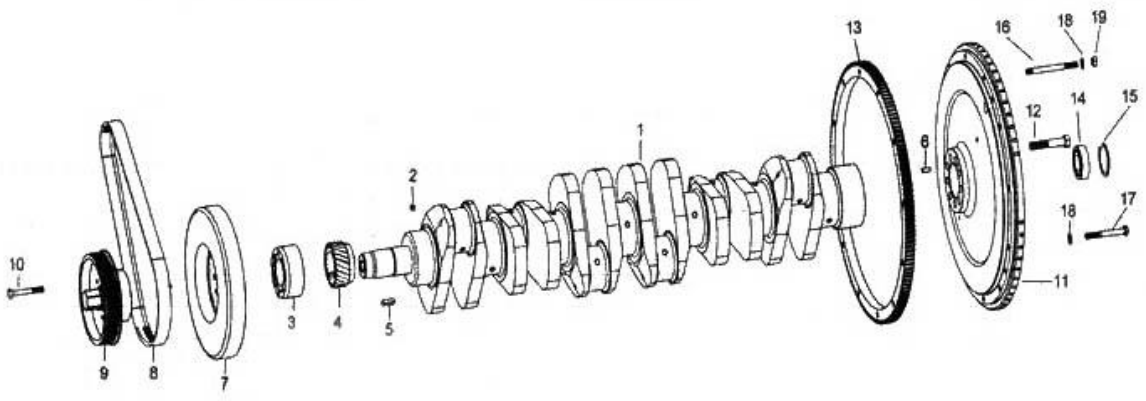

Serial	Part Number	Name in Eng
1	61560020029	Crankshaft
1	61500020071	Crankshaft
1	61560020024	Crankshaft
1	61500020012	Crankshaft
2	VG1560029001	Plug
3	VG1500020070	Flange
4	VG14020038	Crankshaft gear
5	Q5510828	Flat key
6	90003901418	Cylindrical pin
7	VG1540020003	Shock absorber
8	VG2600020251	Ribbed belt
8	VG10620600016	Ribbed belt
8	VG10620600019	Ribbed belt
9	VG1047020020	Pulley
9	VG1062020002	Pulley
10	90003802558	Hex head bolt
11	R61540020204	flywheel
11	AZ1092020003	flywheel
12	VG1500020046	Hex head bolt
13	VG2600020208	Flywheel gear ring
14	90003311416	Radial ball bearings
15	90003934310	Hole circlips 62x2
16	90003932024	Wave washer B10
17	90003800579	Hex head bolt
18	90003813571	Studs
19	90003871305	Type 1 hex head nut

活塞连杆部分 Piston and Connecting Rod

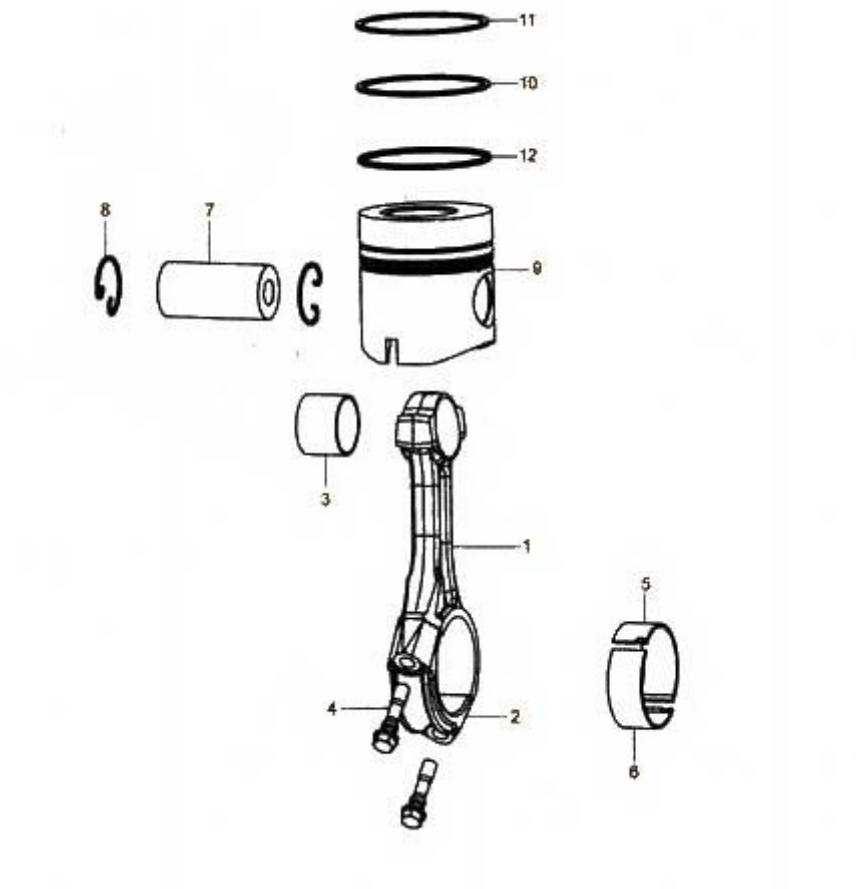

Serial	Part Number	Name in Eng
1	161500030008	Connecting rod body
2	161500030022	Connecting rod cover
3	VG1500030077	Connecting rod bushing
4	VG1500030023	Connecting rod bolt
5	VG1560037034	Connecting rod upper bearing
6	VG1560037033	Connecting rod lower bearing
7	VG1560030013	Piston pin
8	VG1560030012	Piston retainer ring
9	VG1560030010	piston
9	VG1560037011	piston
10	VG1540030006	Cone ring
11	VG1540030007	Trapezoid barrel surface ring
12	VG1540030008	Spiral spring oil ring

气缸盖和配气机构部分 Cylinder Head and Valve-Gear Mechanism

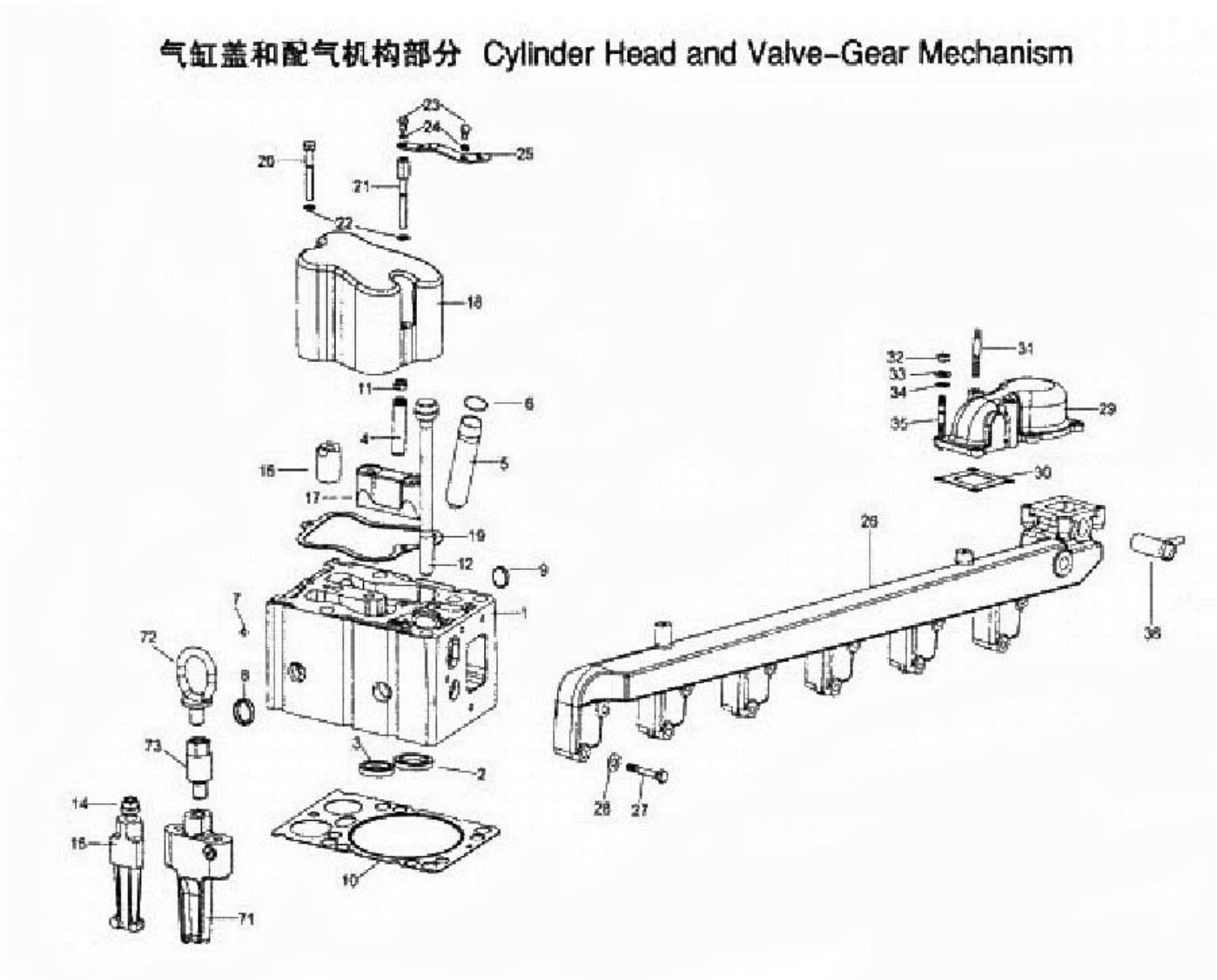

Serial	Part Number	Name in Eng
	AZ1096040028	Cylinder head assembly
1	AZ1096040020	Cylinder head
2	VG1560040057	Intake valve seat
3	VG1560040037	Exhaust valve seat
4	VG1560040031	valve guide
5	VG1096040001A	Injector bushing
6	VG1540040010	Injector bushing seal
7	VG1540040011	Oil hole blocked
8	90003989721	Bowl-shaped plug
9	90003989294	Bowl-shaped plug
10	VG1500040065	Cylinder head gasket
11	VG1560040032	Valve stem gland
12	VG1500040023	Cylinder head main bolt

14	VG1200040034	With shoulder nut
15	VG1200040023A	Clamping block
16	VG1200040027	Clamping block
17	VG1500040009	Clamping block
18	VG1500040066	Cylinder head cover
19	VG14040065	Cylinder head cover gasket
20	90003800466	Hex head bolt
21	VG1096040021	Hex head bolt
22	90003932023	Wave-shaped washer
23	Q150B0610	Hex head bolt
24	Q41806	Wave-shaped washer
25	VG1096080082	Bracket
26	VG1096040330	Outlet
27	90003800466	Hex head bolt
28	90003932023	Wave-shaped washer
29	VG1096040332	Outlet take over
30	VG1096040331	Outlet pipe gasket
31	90003813467	Studs
32	90003871252	I-type hex head nut
33	90003932023	Wave-shaped washer
34	90014040007	Flat Washers
35	90003813429	Studs
36	VG1500060045	Fitting assembly
37	VG1500050096	Camshaft
38	VG14050133	Camshaft thrust plate
39	90003802411	Hex head bolt
40	VG14050053	Camshaft timing gear
41	90003901409	Cylindrical pin
42	90003802443	Hex head bolt
43	VG1092050020	Valve putter assembly
44	VG1500050032	Valve tappet
45	VG1560050041	Exhaust valve
45	VG1560050027	Exhaust valve
46	VG1560051001	Intake valve
47	VG1500050001	Valve spring
48	VG1500050002	Out-valve spring
49	VG1500050109	Valve spring seat
50	VG1500050025	Valve lock clip
51	VG1500050105	Valve cap

52	VG1500050121	Compression block
53	VG1500050011	Adjust the screw assembly
54	VG1500050030	Exhaust valve rocker arm assembly
55	VG1500050120	Valve rocker seat
56	VG14050048	Intake valve rocker arm
57	VG1500050017	Valve clearance adjustment screw
58	VG14050010	Valve clearance adjustment screw
59	VG2130050065	Valve clearance adjustment nut
60	Q150B12100TF2	Hex head bolt
61	VG1560050045	Cover
62	90003802411	Hex head bolt
63	90003932023	Wave-shaped washer
64	90003120602	Sealing ring
65	VG1560050059	Hex head bolt M10x80
66	VG1560050045	Baffle
67	VG1560050052	Intermediate gear
68	VG1560050051	bushing
69	VG1540059031	Intermediate gear shaft
70	VG1540059032	Intermediate gear washer
71	VG1500040012	Clamping block
72	VG14010388	Screw rings
73	VG1092040016	Press the block bolt

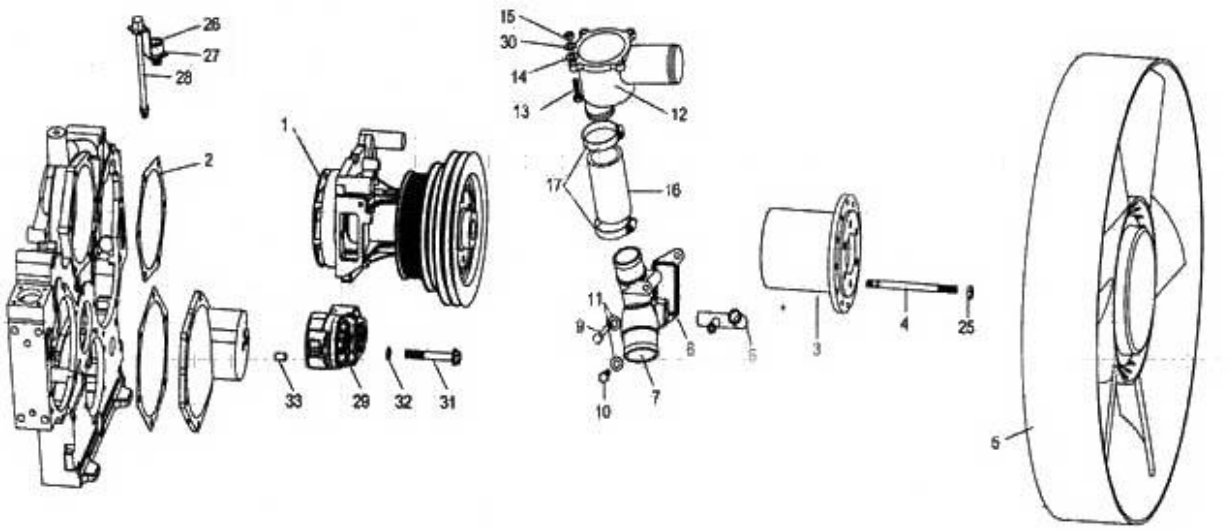

Serial	Part Number	Name in Eng
1	61557010008	Gear room
1	VG1500060051	Water Pump Assembly
2	VG1062060350	Water Pump Assembly
2	VG140608	Pump seal
3	VG1062010170	Air compressor gear cover
3	VG1500060240	Middle flange
4	VG14010040	Air compressor gear cover gasket
4	Q12010170F3	Studs
4	90003813148	Studs
4	VG1034060242	Middle flange
5	VG2600060313	Automatic tensioning wheel
5	VG1500060447	Φ590 ring fan
5	VG1500060402	Φ640 silicone fan
5	VG2600060446	Φ640 ring fan
6	Q150B1055TF2	Hex head bolt
6	VG1560060004	Fitting assembly
7	Q5211014	Cylindrical pin
7	VG1560060022A	pipe connector
8	VG1062060016	V-ribbed belt (fan)
8	VG14060024	Water pipe joint gasket

9	VG1062060200	Pump tensioner bracket
9	90003800467	Hex head bolt
10	VG1062060019	Ribbed belt (water pump)
10	90003802424	Hex head bolt
11	VG1062060201	Pump back to the water pipe
11	90003932023	Wave shape elastic gasket
12	Q67670	Hose clamps
12	VG1096069601	Thermostat assembly (80 degrees)
13	VG1062060203	Hose
13	Q150B0835	Six rabbit head bolts
14	Q150B1016	Hex head bolt
14	Q40108	Flat Washers
15	Q41810	Wave-shaped washer
15	Q340B08	Hex nuts
16	VG1062060202	Water pipe support
16	VG6100060276	Hose
17	1.90004E+11	Hex head bolt
17	90003989308	Hose hoops
18	Q40410	Light spring washer
19	Q40010	Small washer
25	90003888452	2 all-metal hex nut
26	Q218B1625	Hexagon socket head cap screws
27	1.90004E+11	Spring washer
28	VG2600060456	Pump plus butter device
29	VG2600060313	Automatic tensioning wheel
30	Q40308	Wave shape elastic gasket
31	Q150B1075TF2	Hex head bolt
32	90014040008	Flat Washers
33	Q5211022	Cylindrical pin

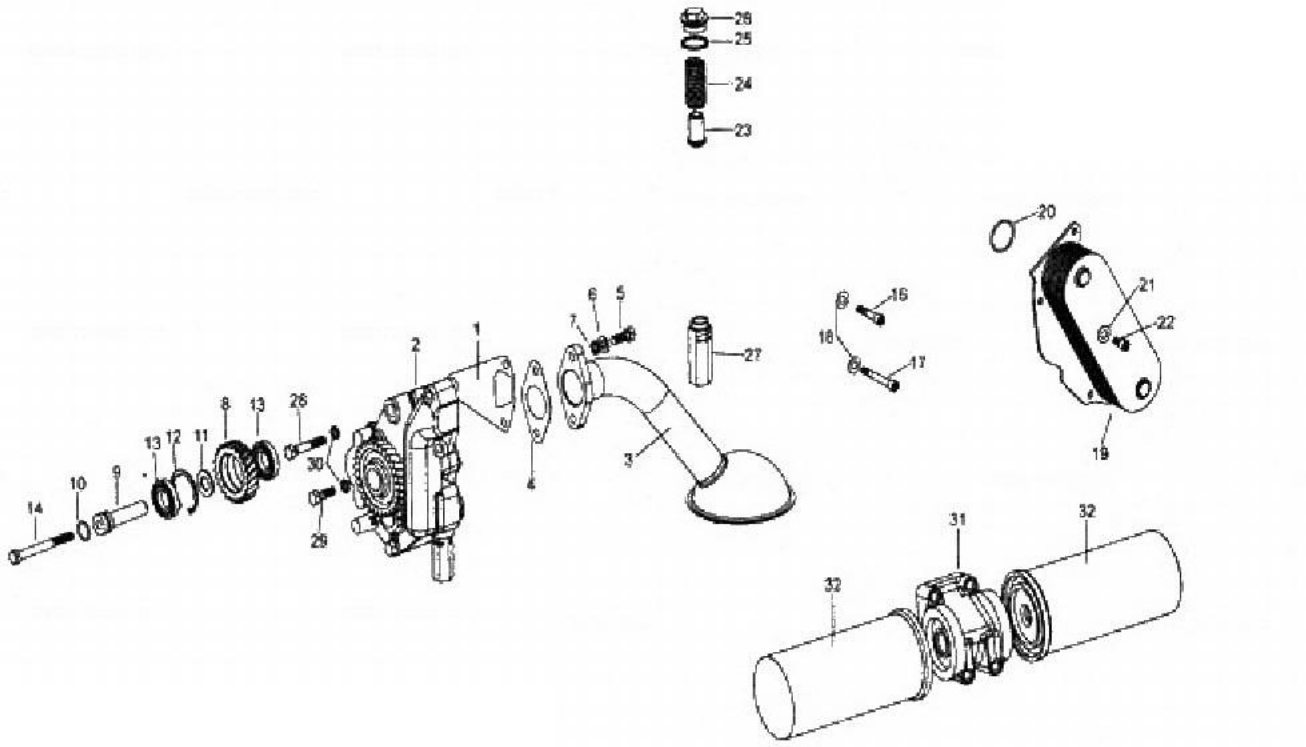

Serial	Part Number	Name in Eng
1	VG14070055	Oil pump gasket
2	VG1500070021	45mm oil pump assembly
3	VG1800070051	Set filter assembly
3	VG1800070052	Set filter assembly
4	VG140778	Gasket
5	90003802523	Hex head bolt
6	90003930271	Gasket
7	90003931122	Spring washer
8	VG14070061	Oil pump intermediate gear
9	VG14070056	Intermediate gear shaft
10	VG14070155	Sealing ring
11	VG14070049	The middle of the ring
12	90003934732	Retaining ring with teeth
13	90003311410	Radial ball bearings
14	90003802578	Hex head bolt

16	90003862443	Hexagon socket head cap screws
17	90003862482	Hexagon socket head cap screws
18	90003932023	Wave-shaped washer
19	VG1500010334	Oil cooler (8 pieces)
20	VG1400010032	Sealing ring
21	90003862419	Hexagon socket head cap screws
22	90003932023	Wave-shaped washer
23	VG14070069	Safety valve
24	VG14070068	Safety valve spring
25	VG2600010735	Composite washer
26	90003962051	Hex head plug
27	VG1500070097	Main oil pipeline pressure limiting valve assembly
28	90003800551	Hex head bolt
29	90003802527	Hex head bolt
30	90003931122	Spring washer
31	VG1500070051	Oil filter base assembly
32	VG61000070005	Spin-on oil filter assembly

供油部分 Fuel System

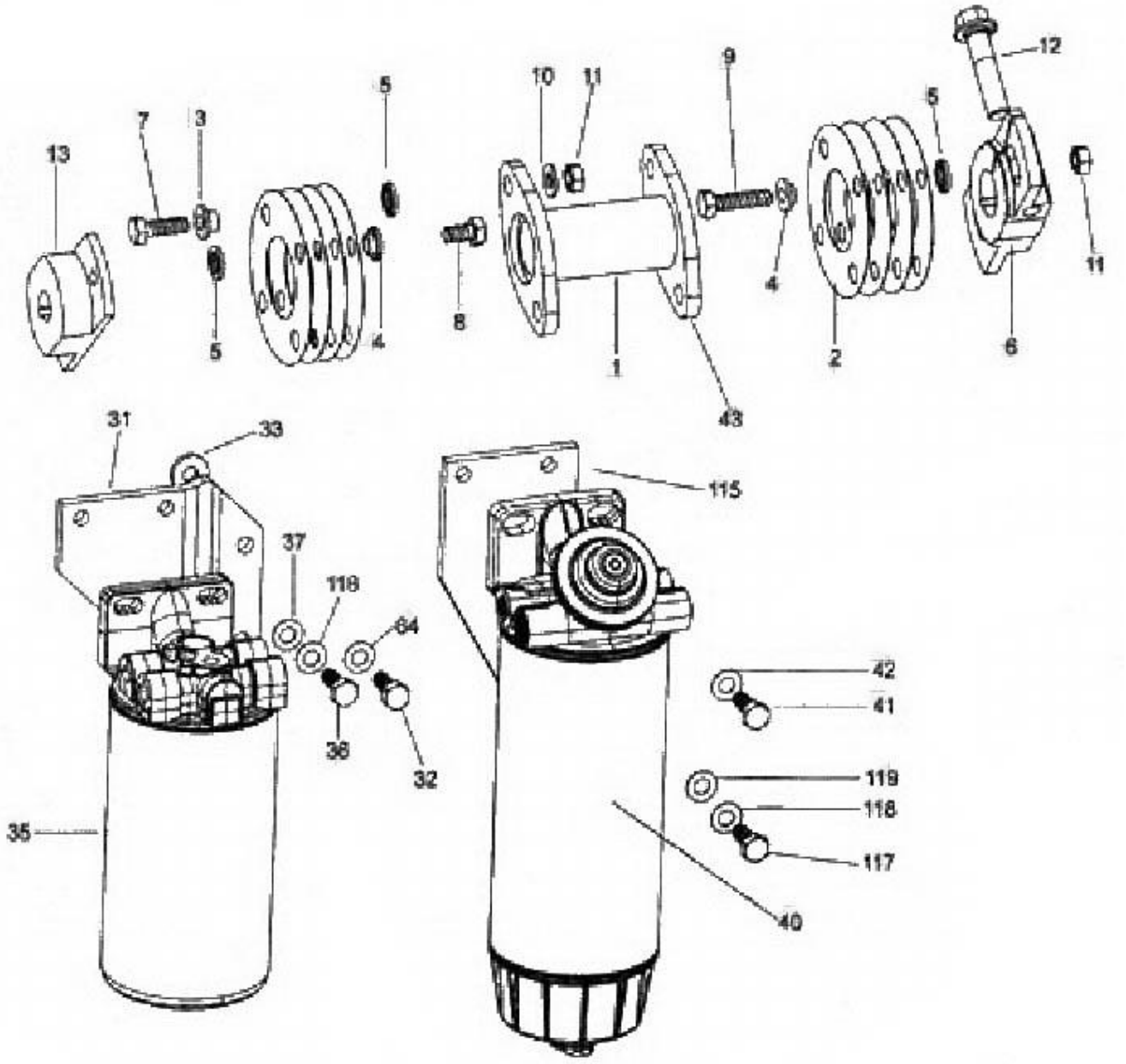

Serial	Part Number	Name in Eng
1	VG1540080299	Coupling flange assembly
2	VG1540080004B	Flexible connecting pieces
3	VG1540080295	bushing
4	VG1540080296	bushing
5	VG1540080007B	washer
6	VG1540080293	Angle adjustment board

7	90003802544	Hex head bolt
8	90003802513	Hex head bolt
9	90003802536	Hex head bolt
10	VG1540080297	washer
11	90003871308	Hex nuts
12	VG1500089018	Hex flange bolts
13	VG1540080292A	Flange
15	R61540080101	Fuel pump
17	90014350010	Spring washer
18	VG1540080091	Hexagon socket head cap screws
19	90003930261	Flat Washers
20	VG188250083	Self-locking washers
21	VG1038080004	Common rail components
22	Q150B0855	Hex head bolt
23	Q41808	Wave-shaped washer
24	VG1038080007	Fuel injector assembly
25	V0096080003	Injector O-ring
26	VG1540080019B	Injector gaskets
28	VG1096080021	Injector compression block
29	Q150B0840TF2	Hex head bolt
30	VG1540080024	Spherical washer
31	VG1540080226	Fuel filter bracket
31	VG1540080126	Fuel filter bracket
32	90003802523	Hex head bolt
33	90003930012	Large washer
34	90003932024	Wave-shaped washer
35	VG1540080330	Fuel filter assembly
35	VG1540080030	Fuel filter assembly
36	90003802527	Hex head bolt
37	90003931122	Spring washer
38	VG1540080022	Wood filter oil spill valve
39	VG2600080200	Gasket
40	VG1038084004	Fuel coarse filter
40	VG1038084001	Fuel coarse filter
41	90003802523	Hex head bolt
42	90003931122	Spring washer
43	VG1540080300	Coupling assembly
44	90003962621	Hollow bolt A8M14x1.5
45	VG2600080200	Gasket

46	VG1099089156	Oil pump into the pipe
47	VG1099080098	Fuel pipe
48	VG1099089099	Fuel pipe
48	VG1099080099	Fuel pipe
48	VG1099089098	Fuel pipe
49	90003962621	Hollow bolt A8M14x1.5
50	VG2600080200	Gasket
51	VG1096080400	High pressure tubing assembly
55	VG1540080058	Double pipe clip components
56	VG1540080052	Double pipe lower clip
57	VG1540080053	Double pipe clamp liner
58	VG1540080059	Triple pipe clip upper components
59	VG1540080055	Triple tubes under the clip
60	VG1540080056	Triple pipe clamp liner
61	90003802331	Hex head bolt
62	90014350003	Spring washer
63	VG1096080321	High-pressure tubing assembly (a)
64	VG1096080322	High-pressure tubing components (b)
65	VG1560070060	High-pressure pump lubricating oil pipe assembly
68	VG1540089097	Lubricating oil return pipe assembly
69	90003962621	Hollow bolt
70	VG2600080200	Gasket
73	VG2600080201	Gasket
74	VG1096080310B	Injector return pipe assembly
75	VG1096080081	Hollow bolt
76	190003962603	Hollow bolt
77	VG9003080003	Composite gasket
86	VG1099080171	Back to the oil connector
87	Q150B0645	Hex head bolt
88	Q40306	Spring washer
89	Q40106	Flat Washers
93	VG1099080173	Common rail components back to the pipe
94	90003962607	Hollow bolt A4M10xl
95	VG9003080003	Composite washer
96	VG1099080274	Cartridge filter back to the pipe
96	VG1540089078	Cartridge filter back to the pipe
97	90003962621	Hollow bolt A8M14x1.5
98	VG2600080200	Gasket
99	VG1096080186	Oil pump back to the pipe

100	90003962621	Hollow bolt A8M14x1.5
101	VG2600080200	Gasket
103	90003962621	Hollow bolt A8M14x1.5
104	VG2600080200	Gasket
105	90003171356	Plastic banding
105	90003171697	Plastic banding
106	VG1096080314C	Support frame
107	VG1096080313	Support frame
108	VG1540080079	Support frame
109	VG1096080331	Support frame
115	VG1540080027	Coarse filter bracket
116	900039350009	Flat Washers
117	Q150B1030	Hex head bolt
118	Q40310	Elastic washers
119	Q40110	Flat Washers

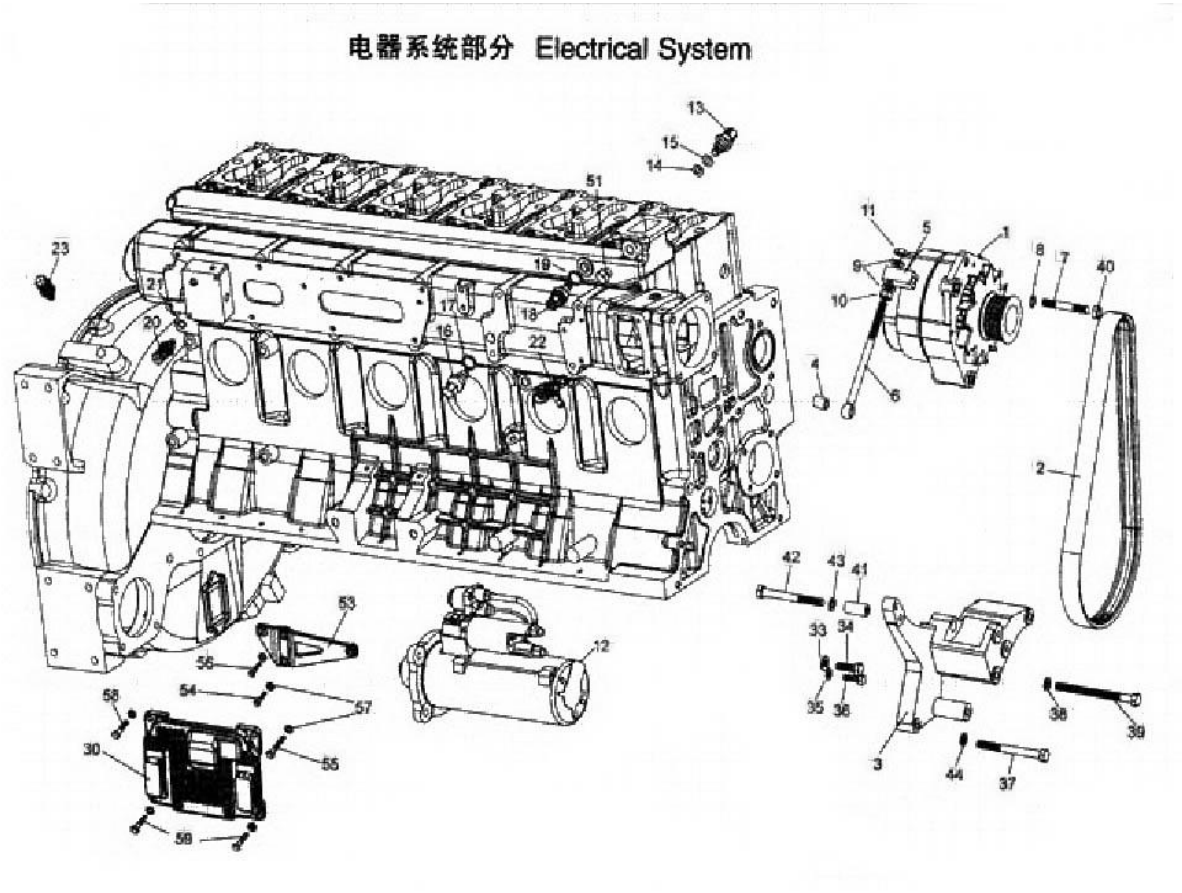

Serial	Part Number	Name in Eng
1	VG1095094001	Alternator
2	VG1500090066	Generator ribbed belt
2	VG1062090001	Ribbed belt
3	VG1500130018A	Air conditioning bracket
4	VG1092094002	Spacer block
5	VG1500090027	Tighten the block
6	VG1500090039	Tighten the bolt
7	VG1092094001	Generator studs
8	Q41710	Saddle elastic washer
9	90003935125	Flat Washers
10	90003871305	Type 1 hex nut
11	90003888452	Hex nut
12	VG1560090007	starter
13	VG1092090311	Electronic oil pressure sensor
14	VG2600080275	Composite gasket
15	90003930261	Flat Washers
16	R61540090003	Intake air temperature sensor
17	Q72316T3M	Gasket

18	R61540090004	Cooling water temperature sensor
19	Q72316T3M	Gasket
20	R61540090005	Diesel temperature sensor
21	R61540090006	Sensor seal
22	R61540090007	Intake air pressure sensor
23	R61540090008	Crankshaft speed sensor
30	VG1038090001	Direct-load ECU assembly
31	VG1038094022	Engine harness
32	VG1540090091A	Support frame
33	90003930271	Flat Washers
34	90003802527	Hex head bolt
35	90014040007	Flat Washers
36	90003802424	Hex head bolt
37	90003800568	Hex head bolt
38	90014070002	Small washer
39	90003800575	Hex head bolt
40	Q33210	Hex nut
41	VG2600090288	Compression block
42	90003800568	Hex head bolt
43	Q41710	Saddle elastic washer
44	190014070002	Small washer
51	VG1500090061	Water temperature sensor
	190003962020	Plug
52	VG2600090318	Water temperature sensor cover
53	VG1099090040B	ECU support plate
54	Q150B0825	Hex head bolt
55	Q1840840	Hex flange bolts
56	Q150B0830	Hex head bolt
57	Q41808	Wave-shaped washer
58	Q1840825	Hex flange bolts
59	Q1840830	Hex flange bolts

HH 进排气系统部分 Intake and Exhaust System

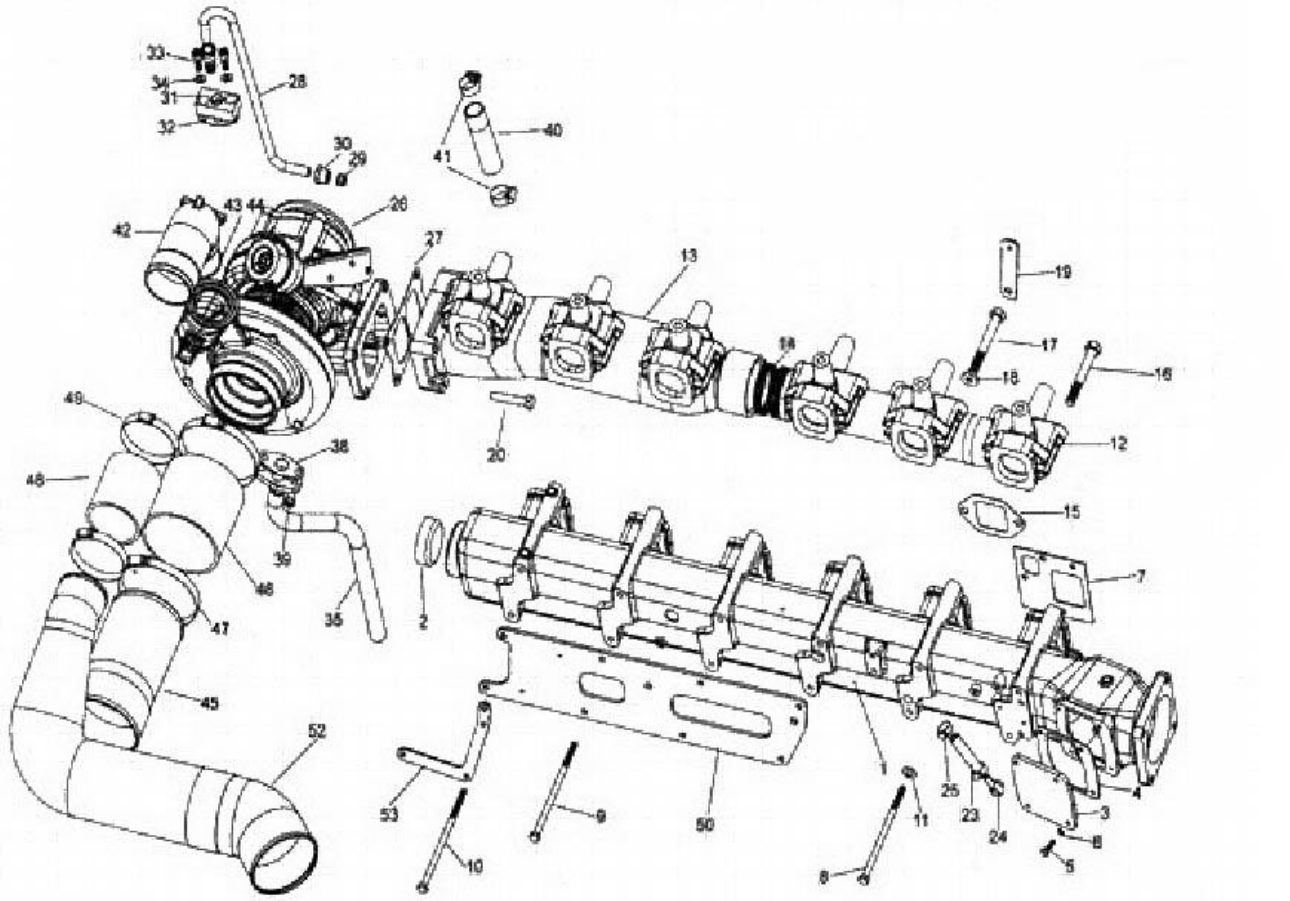

Serial	Part Number	Name in Eng
1	VG1540110043	Intake pipe
2	90003989286	Bowl plug 60/8
3	VG1540110011A	Intake pipe cover
4	VG1540110018A	Intake pipe cover gasket
5	90003802331	Hex head bolt M6x20
6	90003932008	Wave-shaped washer
7	VG1500110024	Intake pipe gasket
8	VG1540110025	Hex head bolt
9	90003800497	Hex head bolt
10	VG1540110054	Hex head bolt
11	90003932023	Wave-shaped washer
12	VG2600111137	Front exhaust manifold
12	VG1540110201	Front exhaust manifold
12	VG2600111290	Front exhaust manifold
13	VG1500110123	Rear exhaust manifold

13	VG1540110202	Rear exhaust manifold
13	VG2600110855	Rear exhaust manifold
14	VG2600110162	Exhaust pipe seal ring
14	VG1540110005	Exhaust pipe seal ring
15	VG1560110111	Exhaust pipe gasket
16	VG2600111052	Exhaust pipe fastening bolt
16	VG1560110104	Exhaust pipe fastening bolt
19	VG1047110105	Bracket
20	VG2600111428	Studs M10x45DIN939
	VG1560110241	Hex head bolt
21	Q150B0615	Hex head bolt
22	90014350003	Spring washer
23	VG1540110035	Coupling hose
24	VG1540110038	Pipe fittings
25	90003989300	Hose clamps
26	VG1034110120	Exhaust gas turbocharger
26	VG1038110120	Exhaust gas turbocharger
26	VG1034110160	Exhaust gas turbocharger
27	VG1500119011	Turbocharger seal
27	VG1540110017	Turbocharger seal
	VG1092110043	Turbocharger into the pipe assembly
	VG1093110046	Turbocharger into the pipe assembly
28	VG1093110045	Turbocharger into the pipe
28	VG1500079022	Turbocharger into the pipe
28	VG1092110024	Turbocharger into the pipe
29	90003559563	card cover
30	90003559513	Union nut ALl2
31	VG1560110152	Inlet flange
32	VG609E110050	Into the pipe gasket
33	90003862428	Hexagon socket head cap screws
34	VG188250083	Self-locking washers
35	VG1560079006	Turbocharger return pipe assembly
35	VG1560070046	Turbocharger return pipe assembly
38	VG2600110048	Return pipe flange gasket
39	VG1460070014	Return pipe bolt
40	VG2600070071	Turbocharger oil return hose
41	910003989300	Hose clamps
	90003989340	Intake valve seat
42	VG1500119016	Connection elbow

42	VG1095110009	Connection elbow
42	VG1095110042	Connection elbow
43	VG1560110226	Clips
44	VG190320035	Sealing ring
48	VG1047110103	Silicone tube
49	VG9003980003	Strong clamp
50	VG1099110115A	Common rail bracket assembly
52	VG1047110104	Cold tube assembly
52	VG1034110013	Cold tube assembly
53	VG1095110051	Cold tube support plate welding pieces
56	VG1560110029	Clamp band
57	90003802419	Hex head bolt
58	90003932023	Wave-shaped washer
59	VG209190017	Tighten the pin
60	VG1700550013	Tighten the pin
61	AZ90003862462	Hexagon nursery screws
62	VG15401100530	Harness bracket
63	VG1800110045	Connection elbow
64	90003802411	Hex head bolt
65	90003932023	Wave-shaped washer
66	VG1047110102	Bracket
67	90003802415	Hex head bolt
68	90003932023	Wave-shaped washer
70	VG2600111144	Front heat shield
70	VG2600111142	Front heat shield
71	VG2600111145	Rear heat shield
71	VG2600111143	Rear heat shield
71	VG2600111146	Rear heat shield
72	90003936109	Large washer
73	VG2600110962	Heat shield bolts
	VG2600110683	bolt
	VG1500110963	bolt
74	VG1096119055	Harness lower support
75	VG1500119020	Exhaust take over
76	VG1560110187	Studs
77	190003888470	Self-locking nuts
78	VG1092110031	Exhaust take over the heat shield

中置增压器进排气系统部分 Intake and Exhaust System

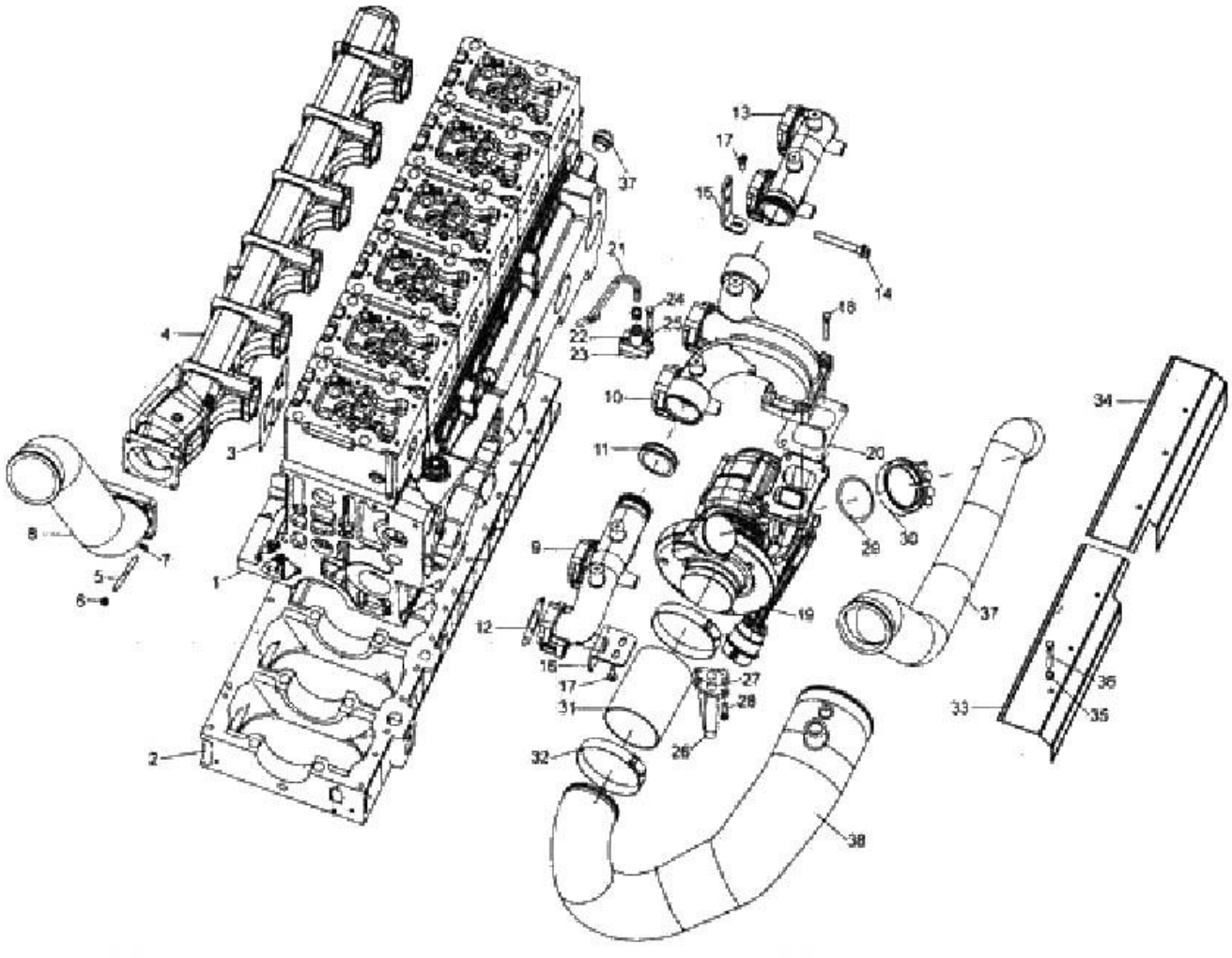

Serial	Part Number	Name in Eng
3	VG1500110024	Intake pipe gasket
4	VG1540110043	Intake pipe
5	Q1201030F3	Studs
6	Q340B10	Hex nuts
7	Q41810	Wave-shaped washer
8	VG1095110100	Air intake
9	VG1092110006	First, second-cylinder exhaust manifold
9	VG1540110145	First, second-cylinder exhaust manifold
10	VG1092110008	Third, fourth-cylinder exhaust manifold
10	VG1540110146	Third, fourth-cylinder exhaust manifold
11	VG1092110009	Fifth, sixth-cylinder exhaust manifold

11	VG1540110147	Fifth, sixth-cylinder exhaust manifold
12	VG1540110005	Exhaust pipe seal ring
12	VG260110162	Exhaust pipe seal ring
13	VG1560110111	Exhaust pipe gasket
14	VG1246110052	Exhaust pipe fastening bolt
15	VG1099110006	Bracket
16	VG1095110102	Bracket
17	Q150B0820	Hex head bolt
18	VG1034110125	Hex head bolt
	VG1038110106	Hex head bolt
	VG1560110187	Studs
	190003888470	Self-locking nuts
19	VG1034110110	Exhaust gas turbocharger
19	VG1038110110	Exhaust gas turbocharger
20	VG1500119011	Turbocharger gasket
20	VG1540110017	Turbocharger gasket
21	VG1093110042	Turbocharger into the pipe
22	VG1560110152	Inlet flange
23	VG609E110050	Into the pipe gasket
24	900103862428	Hexagon socket head cap screws
2	161500010369	Crankcase
1	AZ1095010010A	cylinder block
25	VG188250083	Self-locking washers
26	VG1092110034	Turbocharger return pipe assembly
26	VG1095110025	Turbocharger return pipe assembly
27	VG2600110048	Return pipe flange gasket
28	VG1460070014	Return pipe bolt
29	VG190320035	Sealing ring
30	VG1560110226	Clips
31	VG9112530148	With fiber sandwich rubber hose
32	190003989315	Hose clamps
33	VG10991101004	Front heat shield
34	VG1099110005	After the heat shield
35	Q40008	Small washer
36	VG2600110963	Heat shield bolts
37	VG1095110108	Booster connection elbow
38	VG1095110107	Turbocharger intake pipe
38	VG1099110003	Turbocharger intake pipe

水冷空压机部分 Water-Cooled Air Compressor

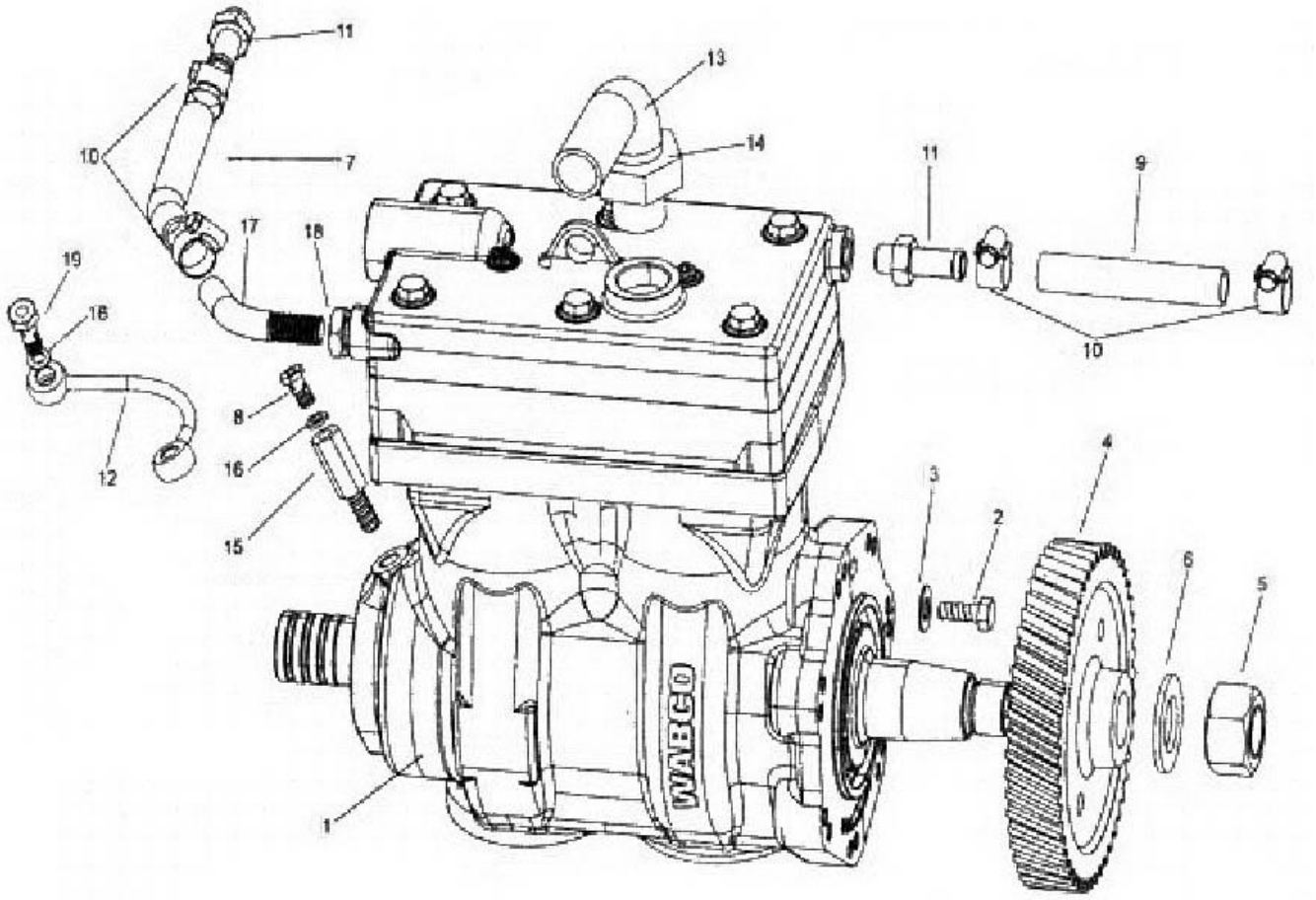

Serial	Part Number	Name in Eng
1	VG1099130010	Double-cylinder water-cooled air compressor
2	Q150B0820TF2	Hex head bolt
3	90003932023	Wave-shaped washer
4	VG15601300154	Fuel pump gear
5	VG2600130045	Hex nuts
6	VG409020045	Gasket
7	VG1092060010	Air compressor inlet
8	VG2600130053	Hollow bolt
9	VG1560060019	Air compressor outlet

10	90003989336	Hose clamps
11	VG2600130026	Water-cooled air compressor pipe joints
13	VG1560130035	Air compressor intake manifold
14	90003559778	Hex nuts
15	VG1560070051	Transition joints
16	VG9003080003	Composite gasket
17	VG1560060012	Air compressor inlet connector
18	Q351B14	Hexagonal thin nut
19	VG1560070050	Air compressor lubricant tube assembly
20	VG1560070012	Hollow bolt
21	190003962607	Hollow bolt
22	VG9003080003	Composite gasket
23	VG2600080200	Gasket

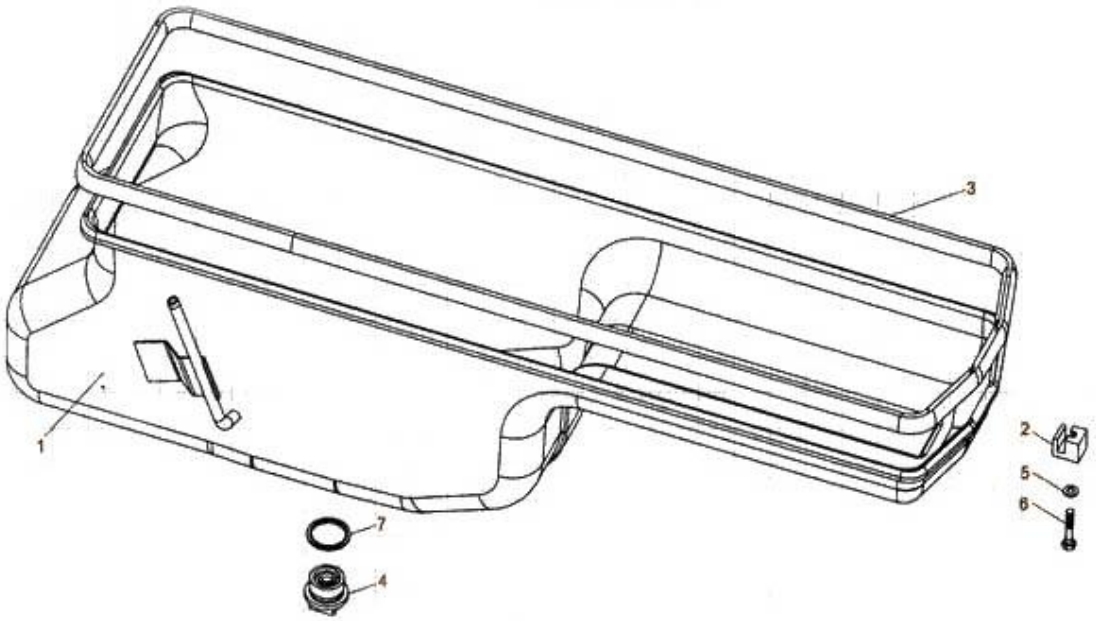

Serial	Part Number	Name in Eng
1	VG1800150015A	Oil pan assembly
	VG1540150010	Oil pan assembly
2	VG14150046	Oil pan support block
3	VG14150004	Gasket
4	VG2600150108	Magnetic plug assembly
5	90003930261	Flat washer
6	90003802442	Hex head bolt
7	VG2600150106	Gasket

后取力部分 Power Take off System

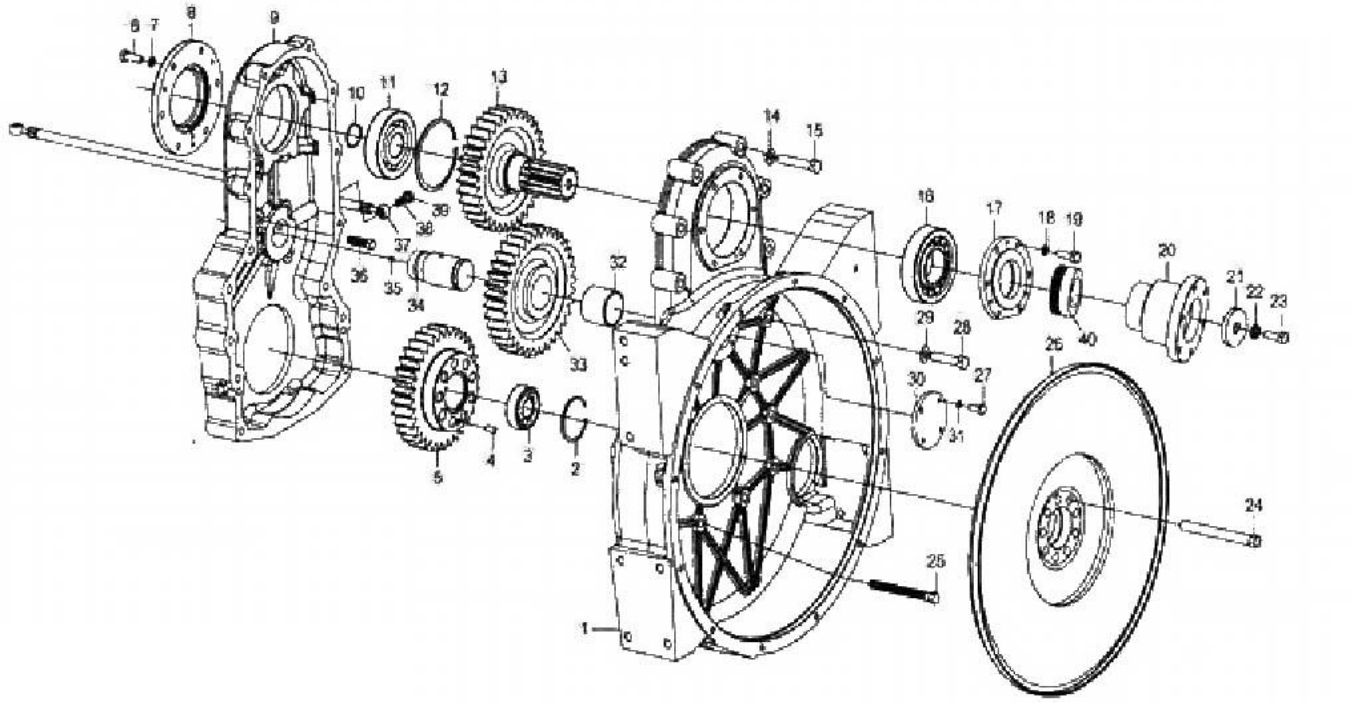

Serial	Part Number	Name in Eng
1	AZ1500019035A	Rear PTO flywheel shell
2	190003934310	Hole with a circlip
3	190003311416	Bearing
4	190003901418	Positioning pin
5	VG1500019014	Crankshaft gear
6	190003802527	Hex head bolt
7	190003931122	Spring washer
8	VG1500019024	Bearing cap
9	AZ1500019031	Power take off shell
10	190003933251	Shaft retaining ring
11	AZ9003320122	Rolling bearings
12	190014570001	Hole with a circlip
13	VG1500019015A	Output gear

14	190003932016	Wave-shaped washer
15	190011350066	Hex head bolt
16	AZ9003320120	Rolling bearings
17	VG1500019023A	Oil seal seat
18	190003931122	Spring washer
19	190003802527	Hex head bolt
20	VG1500019025A	Output flange
21	VG1500019026	Output flange fastening plate
22	190003931162	Spring washer
23	190011270032	Hex head bolt
24	VG1500029046	Hex head bolt
25	VG1500019027	Flywheel shell bolt
	VG1500019011	Flywheel shell bolt
26	R61540020304	flywheel
27	190003802419	Hex head bolt
28	190011350058	Hex head bolt
29	190003932016	Wave-shaped washer
30	VG1500019022	Intermediate gear shaft cover
31	190003931102	Spring washer
32	VG1500019017	bushing
33	VG1500019016	Intermediate gear
34	VG1500019033	Intermediate gear shaft
35	VG1500019034	Oil plug
36	VG1500019028	Flywheel shell bolt
	VG1500019012	Flywheel shell bolt
37	VG1500019029	Lube tube assembly
38	VG9003080003	Composite gasket
39	190003962607	Hollow bolt
40	VG1500019040	Oil seal bushing

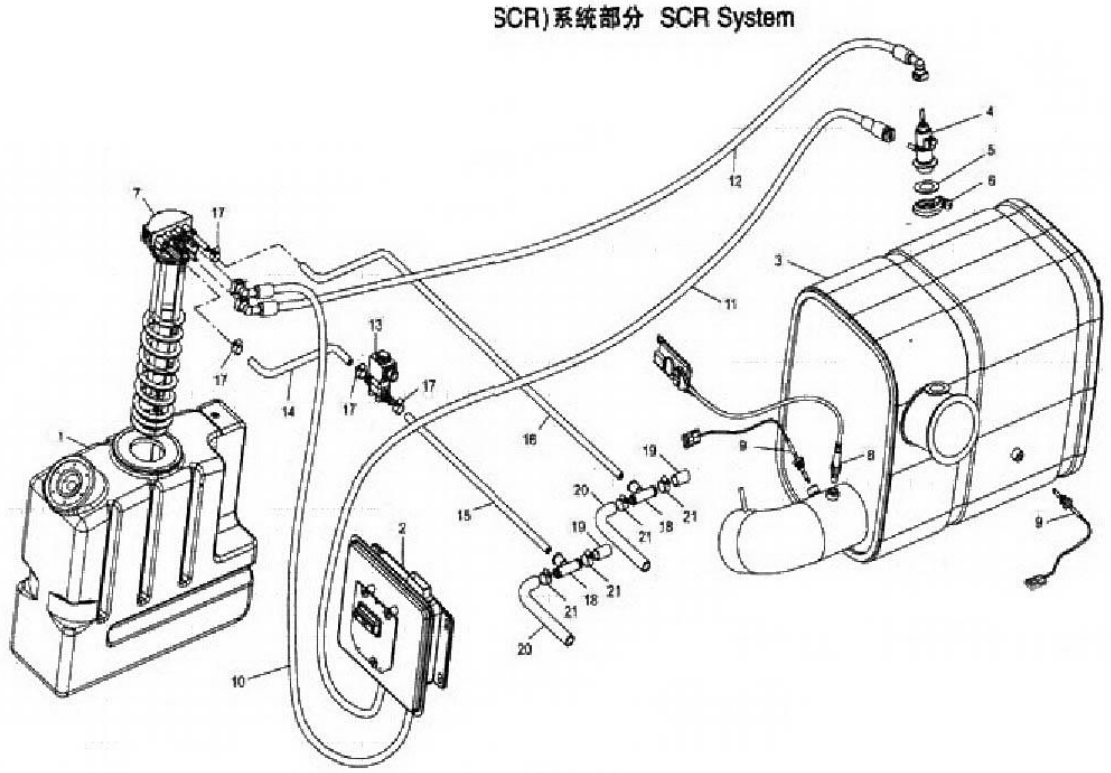

Serial	Part Number	Name in Eng
1	WG1034120007	Urea tank assembly
2	WG1034120002	Urea pump and DCU assembly
3	WG9725540260	Catalyst assembly (muffler)
4	WG1034120001	Urea nozzle assembly
5	WG1034120057	Urea nozzle gasket
6	WG1034120058	V-shaped clamp
7	WG1034120006	Urea level sensor
8	WG1034120003	NOx sensor assembly
9	WG1034120005	SCR emperature sensor
10	WG1034120008 WG1034120017	Urea tube assembly (urea tank to pump)
11	WG1034120022 WG1034120026	Urea tube assembly two (pump to the nozzle)
12	WG1034120023 WG1034120027	Urea tube assembly three (nozzle to urea tank)

13	WG1034120011	Coolant check valve
14	WG1034120013	Coolant tube 1st
15	WG1034120012	Coolant tube 2nd
16	WG1034120014	Coolant tube 3rd
17	190003989301	Hose clamps
18	WG9125540065	Triple links
19	116103840030	Rubber hose
20	WG9112530482	Rubber hose
21	190003989302	Hose clamps
22	WG1034120028	SCR system harness
	WG1034120020	Urea level sensor and heater assembly