SINOTRUK

D12 ENGINE, EURO II SPARE PARTS CATALOG

https://www.sinosoon.com Email:market@sinosoon.com

INDEX

ELECTRIC SYSTEM	Page 3
FUEL SUPPLY	Page 4
PISTON & CONNECTING ROD	Page 6
OIL PUMP & FILTER	Page 7
INTAKE & EXHAUST SYSTEM	Page 8
AIR VALVE MECHANISM	Page 11
CYLINDER COVER	Page 13
CRANKSHAFT & FLY WHEEL	Page 15
WATER PUMP & COOLING SYSTEM	Page 16
AIR COMPRESSOR	Page 18
OIL PAN	Page 19

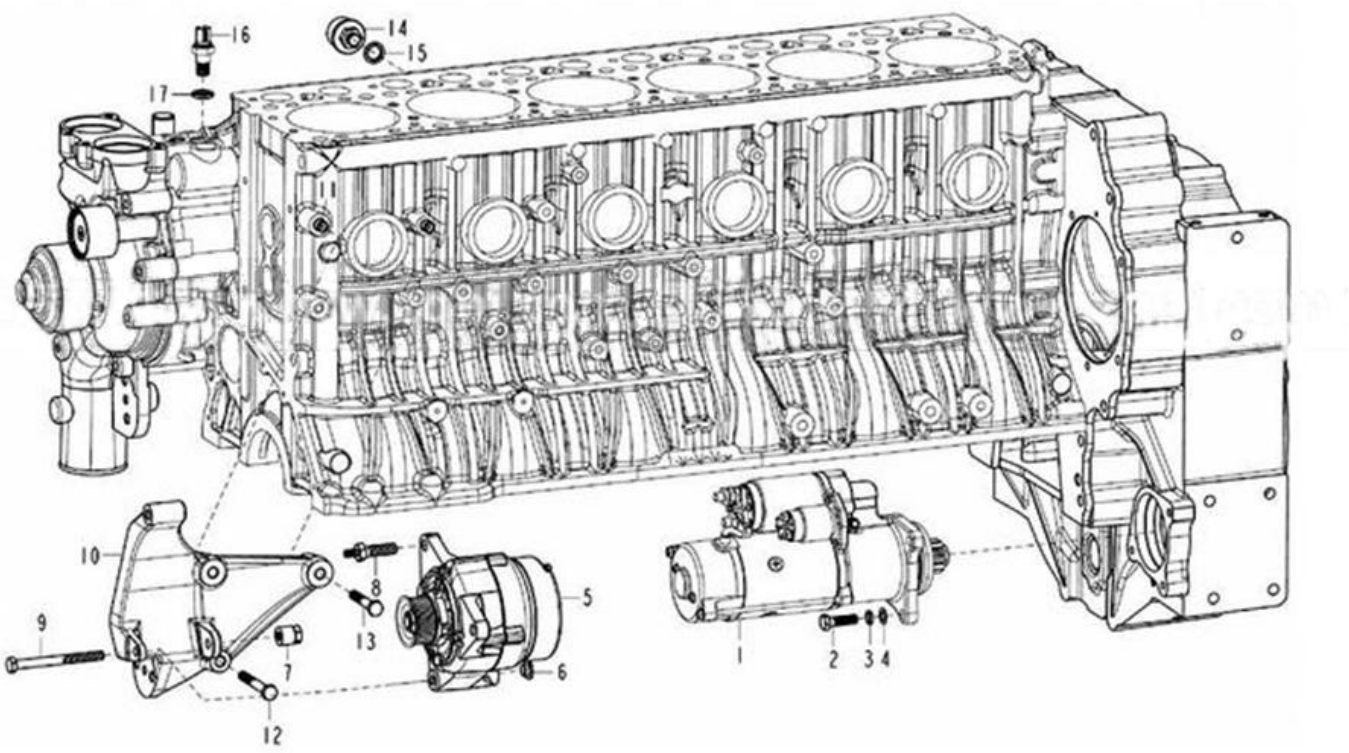

ELECTRIC SYSTEM, D12 EURO-II ENGINE		
Serial	Name	Number
1	starter	vg1246090003
2	hexagonal head bolt	q150b1035
3	spring gasket	q40310
4	flat gasket	q40110
5	generator	vg1246090005
6	shaft sleeve	vg1246090006
7	spacer bush	vg1246090007
8	double head bolt	vg1246090027
9	hexagonal head bolt	q150b10110
10	generator support	vg1246090008
11	positioning sleeve	vg1246090009
12	hexagonal head bolt	q150b1075
13	hexagonal head bolt	q150b1060
14	pressure sensor	vg1500090060
15	compound sealing ring	vg9003080007
16	water temperature sensor	vg1500090061
17	compound sealing ring	vg9003080005
CHINA HEAVY TRUCK PARTS STORE CO LTD		

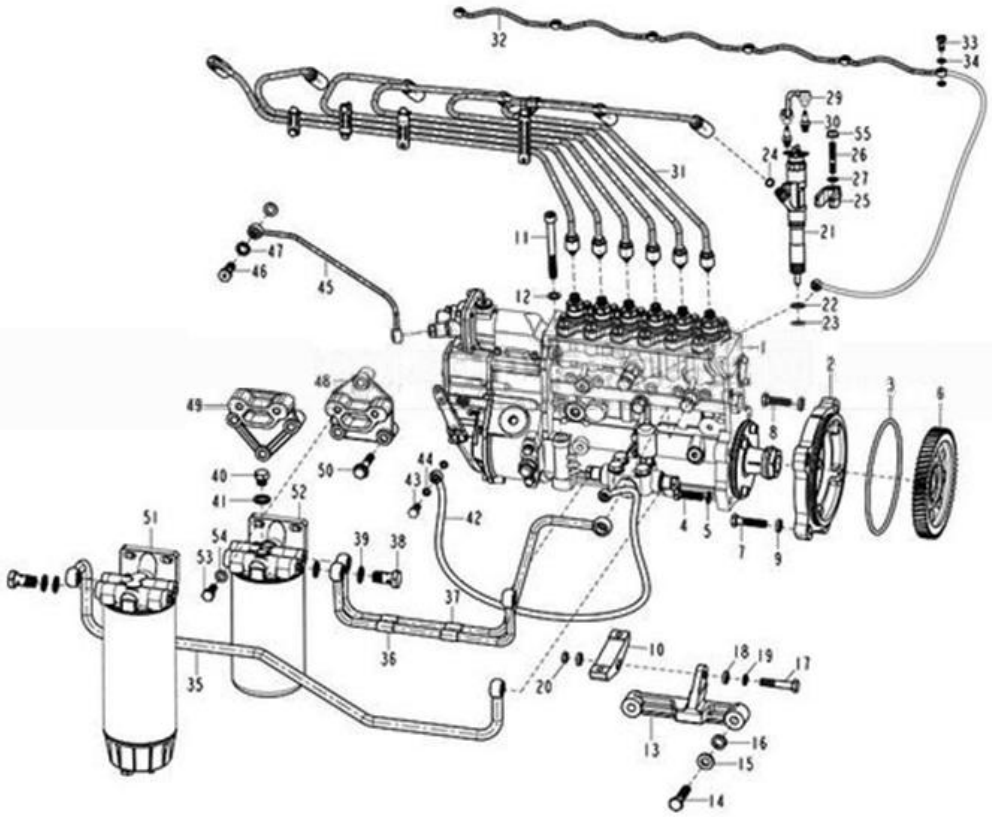

FUEL SUPPLY, D12 EURO-II ENGINE		
Serial	Name	Number
	injection pump	vg1246080097
1	injection pump	vg1246080038
2	flange	vg1246080026
3	O ring	vg1246080027
4	hexagonal head bolt	q150b1035tf2
5	flat gasket	q40110
6	driving gear for oil pump	vg1246080059
7	hexagonal head bolt	q150b1045tf2
8	hexagonal head bolt	q150b1035tf2
9	thick gasket (4mm)	vg1246080042
10	vice support for oil pump	vg1246080041
11	inner hexagonal column head screw	q218b10100
12	spring gasket	q41810
13	vice support for oil pump	vg1246080043
14	hexagonal head bolt	q150b1250
15	spring gasket	q40312
16	thick gasket	vg1246080044
17	hexagonal head bolt	q150b1050tf2

18	flat gasket	q40110
19	spring gasket	q40310
20	hexagonal head bolt	q340b10
21	injector	vg1246080036
22	injector sealing ring	vg1540080018a
23	injector gasket	vg1540080019b
24	sealing ring	vg1540080095
25	pressing plate for injector	vg1246080039
26	double head bolt	vg1099040030
27	ball surface gasket	vg1540080024
29	oil return tube for injector	vg1099089065
30	connector	vg1099089064
31	high pressure fuel pipe	vg1246080002
32	oil return pipe assy for injector	vg1246080093
33	hollow bolt	vg1246080077
34	sealing gasket	vg1540080200
35	first filter for fuel	vg1246080092
36	fuel pipe	vg1246080082
37	fuel pipe	vg1246080080
38	hollow bolt	vg1246080014
39	compound sealing ring	vg9003080006
40	hexagonal head bolt	q617b14
41	compound sealing ring	vg9003080005
42	oil inlet pipe assy for pump	vg1246080098
43	hollow bolt	190003962607
44	compound sealing ring	vg9003080003
45	air pipe	vg1246080099
46	hollow bolt	190003962612
47	compound sealing ring	vg9003080004
48	first filter fixed support	vg1246080020
49	second filter fixed support	vg1246080023
50	hexagonal flange bolt	q1841050
51	separater set	vg1246080084
52	filter set	vg1246080086
53	hexagonal head bolt	q150b1025
54	spring gasket	q41810
55	hexagonal flange bolt	vg1099040010

活塞和连杆

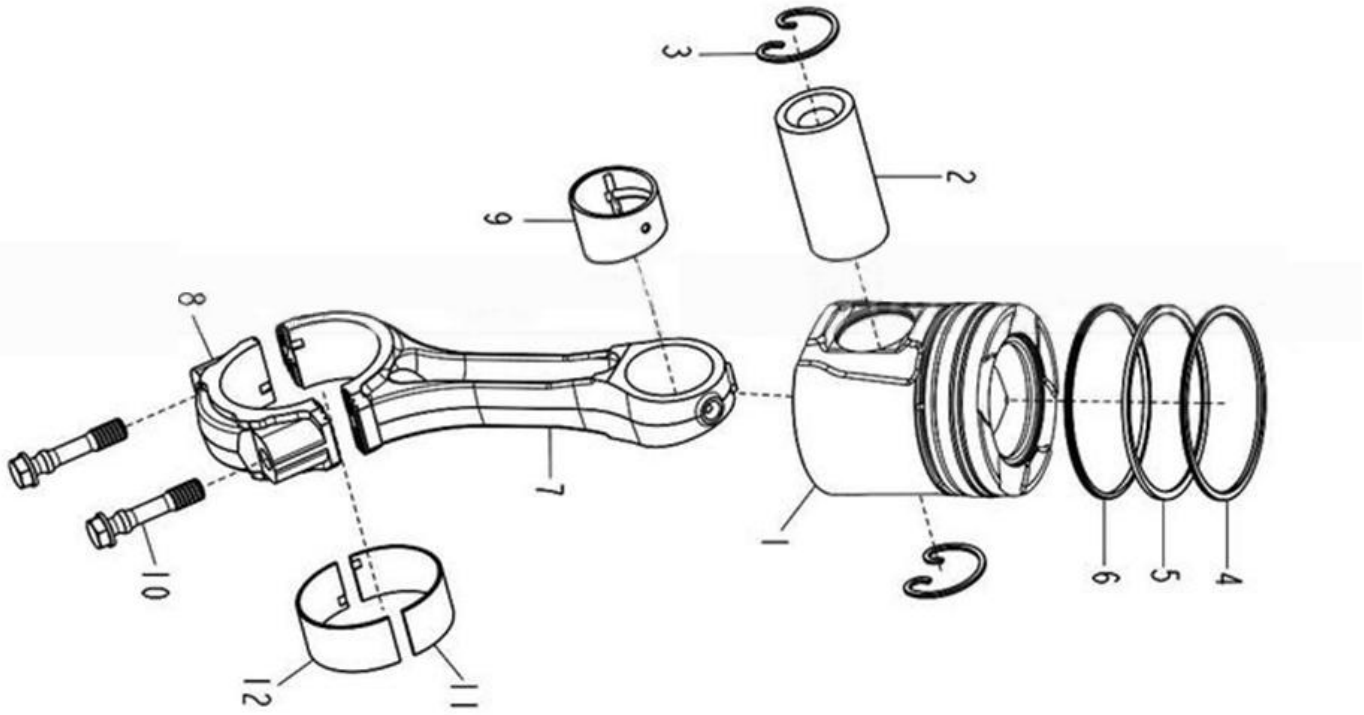

PISTON & CONNECTING ROD, D12 EURO-II ENGINE		
Serial	Name	Number
1	piston	vg1246030001
2	piston pin	vg1246030002
3	piston pin retaining ring	vg1246030003
4	keystone ring	vg1246030004
5	cone ring	vg1246030005
6	oil ring	vg1246030006
7	connecting rod	az1246030008
8	connecting rod cover	az1246030009
9	connecting rod bush	vg1246030010
10	connecting rod bolt	vg1246030013
11	upper bush	vg1246030011
12	lower bush	vg1246030012

机油泵和滤清器

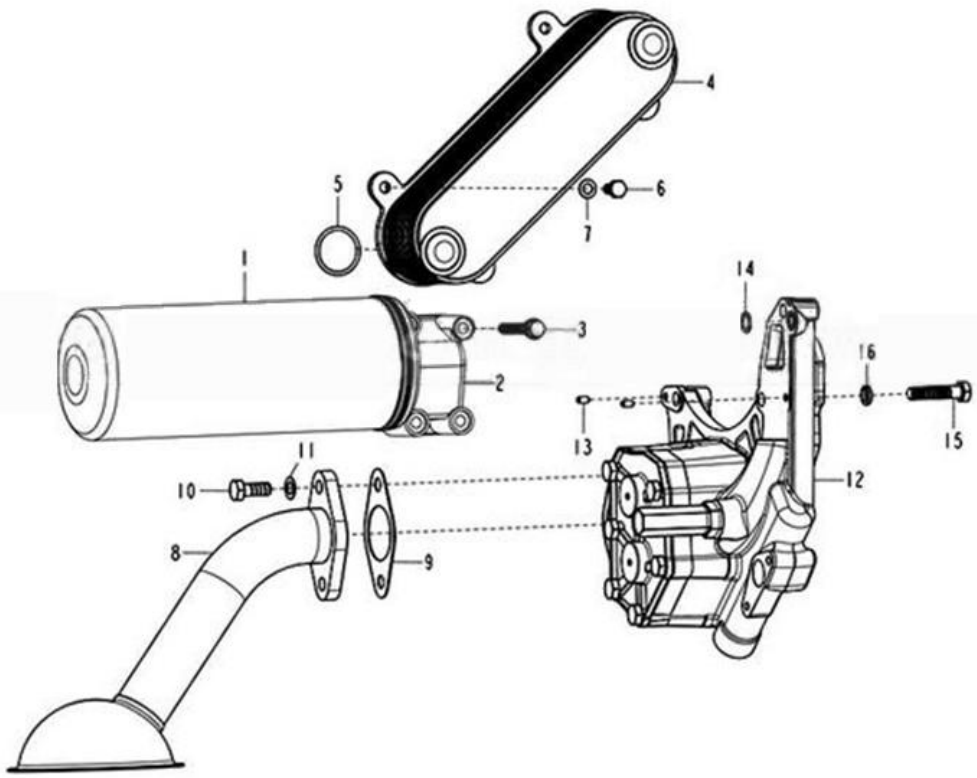

OIL PUMP & FILTER, D12 EURO-II ENGINE		
Serial	Name	Number
-	oil filter	vg1246070001
1	oil filter	vg1246070002
2	seat for filters	vg1246070003
3	hexagon flange bolt	q1840860
4	oil cooler	vg1246070012
5	sealing ring	vg1400010032
6	hexagonal head bolt	q150b0816
7	spring gasket	q41808
8	collecter	vg1246070014
9	gasket	vg140778
10	hexagonal head bolt	q150b1025
11	spring gasket	q41810
12	oil pump	vg1246070022
13	column pin	q5210510
14	O ring	vg1246070036
15	hexagonal head bolt	q150b1045
16	spring gasket	q40310

进排气系统

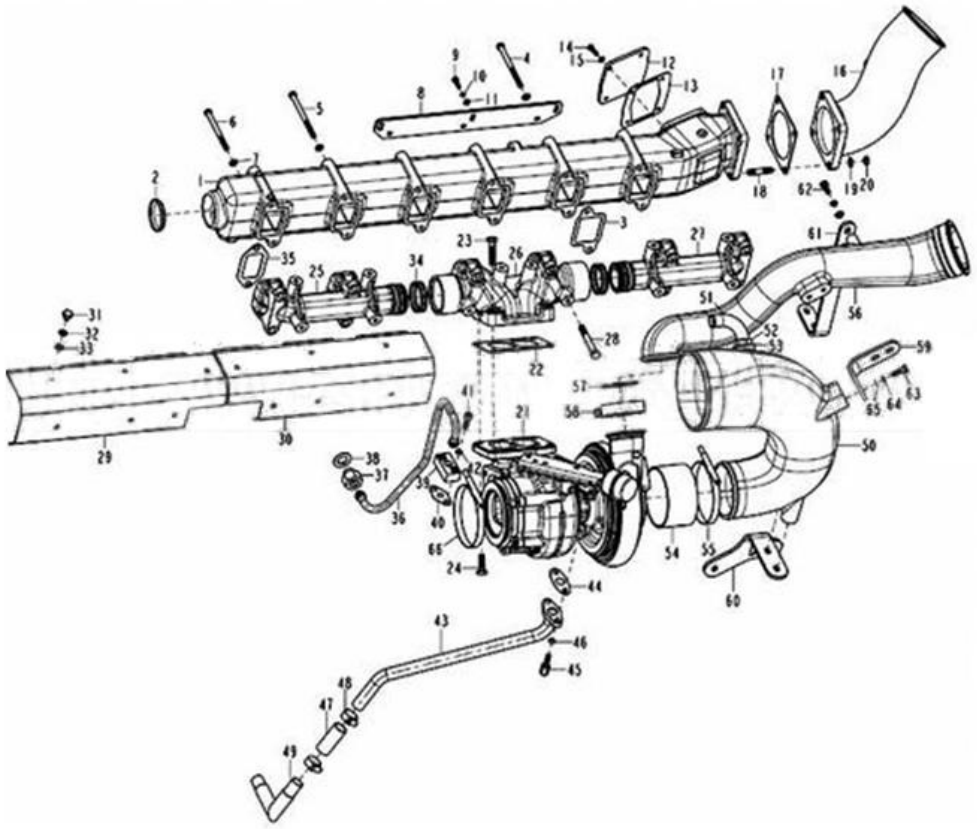

INTAKE & EXHAUST SYSTEM, D12 EURO-II ENGINE		
Serial	Name	Number
1	intake tube	vg1246110061
2	plug	190003989286
3	gasket for intake tube	vg1246110006
4	hexagonal head bolt	q150b08115
5	hexagonal head bolt	q150b08110
6	hexagonal head bolt	q150b08100
7	spring gasket	q41808
8	supporting plate	vg1246110203
9	hexagonal head bolt	q150b0620
10	spring gasket	q40306
11	flat gasket	q40106
12	cap for intake tube	vg1540110011a
13	cap gasket	vg1540110018a
14	hexagonal head bolt	q150b0620
15	gasket	q41806
16	intake connecting tube	vg1246110100

17	connecting tube gasket	vg1560110180
18	doule head bolt	q1201030f3
19	spring gasket	q41810
20	hexagonal nut	q340b10
21	turbo charger	vg1246110021
22	turbo charger gasket	vg1540110017
23	bolt	vg1500110002
24	bolt for turbo	vg1246110058
25	front exhaust divided pipe	vg1246110108
26	middle exhaust divided pipe	vg1246110109
27	rear exhaust divided pipe	vg1246110110
28	locking bolt for exhaust pipe	vg1246110052
29	heat shield for front exhaust pipe	vg1246110112
30	heat shield for rear exhaust pipe	vg1246110111
31	heat resistant bolt	vg1500110963
32	big gasket	q40208
33	spring gasket	q41808
34	sealing ring for exhaust pipe	vg1246110027
35	exhaust pipe gasket	vg1246110028
36	oil inlet pipe for turbo	vg1246110053
37	seat for oil inlet pipe	vg1246110046
38	compound sealing gasket	vg9003080007
39	oil inlet flange	vg1560110152
40	gasket for oil inlet pipe	vg609e110050
41	inner hexagon colum head screw	q218b0825
42	self locking gasket	vg188250083
43	oil return pipe for turbo	vg1246110055
44	flange gasket	vg2600110048
45	bolt for oil return pipe	vg1460070014
46	self locking gasket	vg188250083
47	soft tube for oil return	vg2600070071
48	soft tube clip	190003989301
49	elbow pipe	vg1246110022
50	intake pipe for turbo	vg1246110095
51	intake pipe connector for air compressor	vg1246130016
52	hexagonal head bolt	190003559778
53	gasket	vg2600130037
54	rubber soft tube	vg1246110102

55	soft tube clip	190003989315
56	connecting elbow pipe	vg1246110099
57	sealing ring	vg190320035
58	clip	vg1560110226
59	fixed support one	vg1246110097
60	fixed support tow	vg1246110098
61	fixed support four	vg1246110104
62	hexagonal head bolt	q150b0820
63	hexagonal head bolt	q150b0825
64	spring gasket	q40308
65	flange gasket	q40108
66	clip	vg1500119216

配气机构

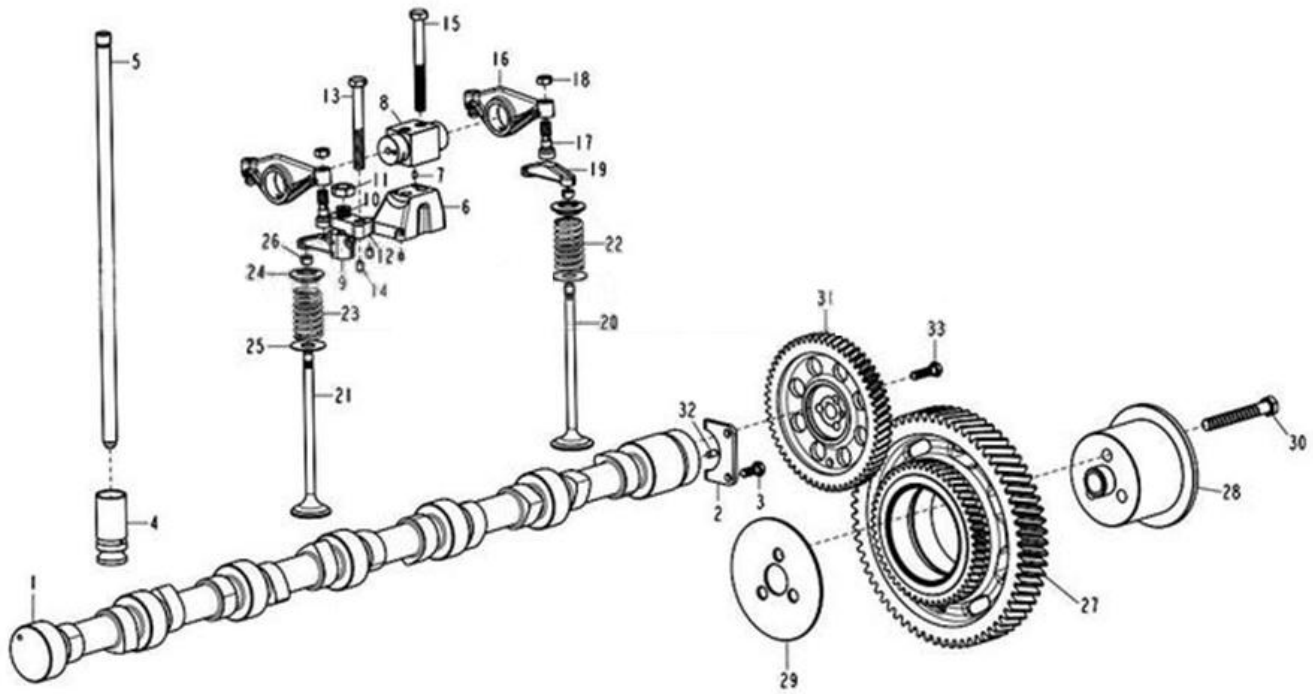

AIR VALVE MECHANISM, D12 EURO-II ENGINE		
Serial	Name	Number
1	camshaft	vg1246050038
2	camshaft thrust washer	vg1246050039
3	hexagonal head bolt	q150b0820tf2
4	air valve tappet	vg1246050029
5	air valve rod	vg1246050020
6	arm-rocking seat	vg1246050005
7	column pin	q5210406
8	arm-rocking shaft	vg1246050006
9	evb exhaust valve bridge component	vg1246050050
10	evb adjusting screw	vg1246050055
11	evb adjusting nut	vg1246050056
12	evb pressure plate	vg1246050057a
13	hexagonal head bolt	q150b1095tf2
14	column pin	q5210614
15	hexagonal head bolt	q150b10100tf2
16	air valve arm-rocking	vg1246050008

17	air valve bridge adjusting screw	vg1246050011
18	air valve gap adjusting nut	vg2130050065
19	air valve bridge	vg1246050013
20	air inlet valve	vg1246050021
21	exhaust valve	vg1246050022
22	air inlet valve spring	vg1246050023
23	exhaust valve spring	vg1246050024
24	upper seat of air valve spring	vg1246050025
25	lower seat of air valve spring	vg1246050026
26	air valve locking clamp	vg1246050028
27	middle gear	vg1246050060
28	middle gear shaft	vg1246050034
29	thrust washer	vg1246050035
30	hexagonal head bolt	q150b1290tf2
31	camshaft gear	vg1246050036
32	column pin	q5210612
33	hexagonal head bolt	q150b0830tf2

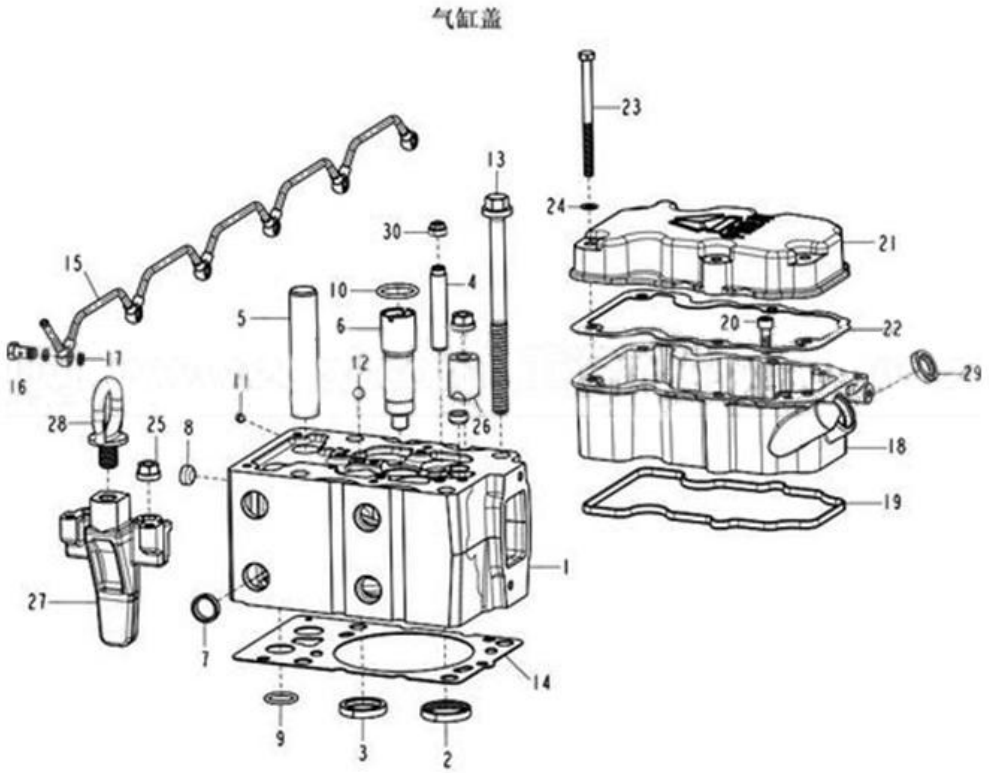

CYLINDER COVER, D12 EURO-II ENGINE		
Serial	Name	Number
	cylinder cover	az1246040010
1	cylinder cover	az1246040011
2	air inlet seat	vg1246040012
3	exhaust valve seat	vg1246040013
4	air valve guiding pipe	vg1246040014
5	air valve pushing rod bush	vg1246040015
6	injector bush	vg1246040016
7	plug	190003989725
8	plug	vg1246040031
9	sealing ring	vg1246040018
10	sealing ring	vg1246040019
11	oil hole plug	vg1540040011
12	steel ball	vg1540040013
13	cylinder cover main bolt	vg1246040020
14	cylinder cover bush	vg1246040021
15	cylinder deflate pipe	vg1246040001

16	hollow bolt	vg1246040022
17	sealing gasket	q72310
18	rocking arm lower cover	vg1246040030
19	cylinder cover sealing ring	vg1246040023
20	inner hexagon column head screw	q218b0825
21	rocking arm upper cover	vg1246040003
22	cylinder cover gasket	vg1246040005
23	hexagonal head bolt	q150b08110
24	spring gasket	q41808
25	nut	vg1200040034
26	clamp	vg1200040023a
27	hanger clamp	vg1246040008
28	hanger screw	vg14010388
29	frame oil seal	vg1540040022a
30	air valve rod sealing set	vg1246050027

曲轴和飞轮

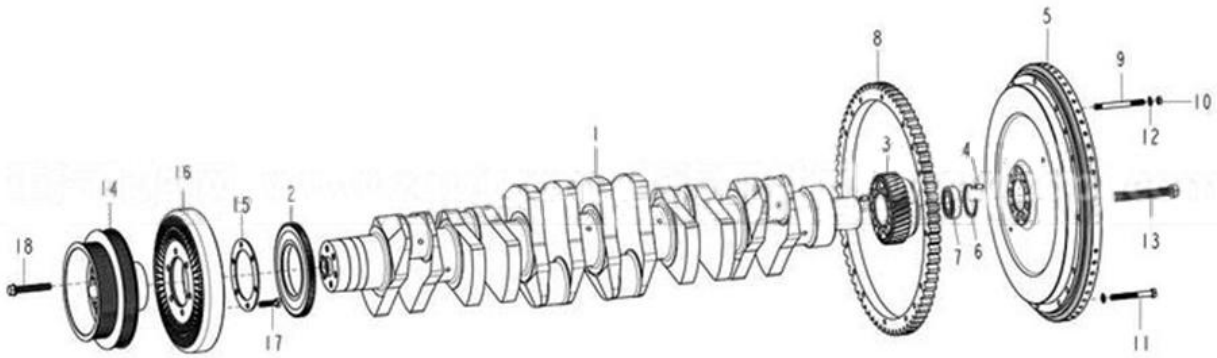

CRANKSHAFT & FLY WHEEL, D12 EURO-II ENGINE		
Serial	Name	Number
1	crankshaft	az1246020013
2	front gear of crankshaft	vg1246020012
3	rear gear of crankshaft	vg1246020011
4	column pin	q5210816
5	flywheel	az1246020025a
6	elastic retaining ring	q43062
7	ball bearing	190003311416
8	fly wheel gear	vg2600020208
9	double head bolt	q1201090f3
10	hexagonal nut	q340b10
11	hexagonal bolt	q150b1085
12	spring gasket	q41810
13	fly wheel bolt	vg1246020010
14	belt wheel for crankshaft	vg1246020001
15	gasket ring	vg1246020003
16	silicone oil suspension	vg1246020002
17	hexagonal bolt	q150b1030
18	hexagonal bolt	vg1246020004

水泵和冷却系统

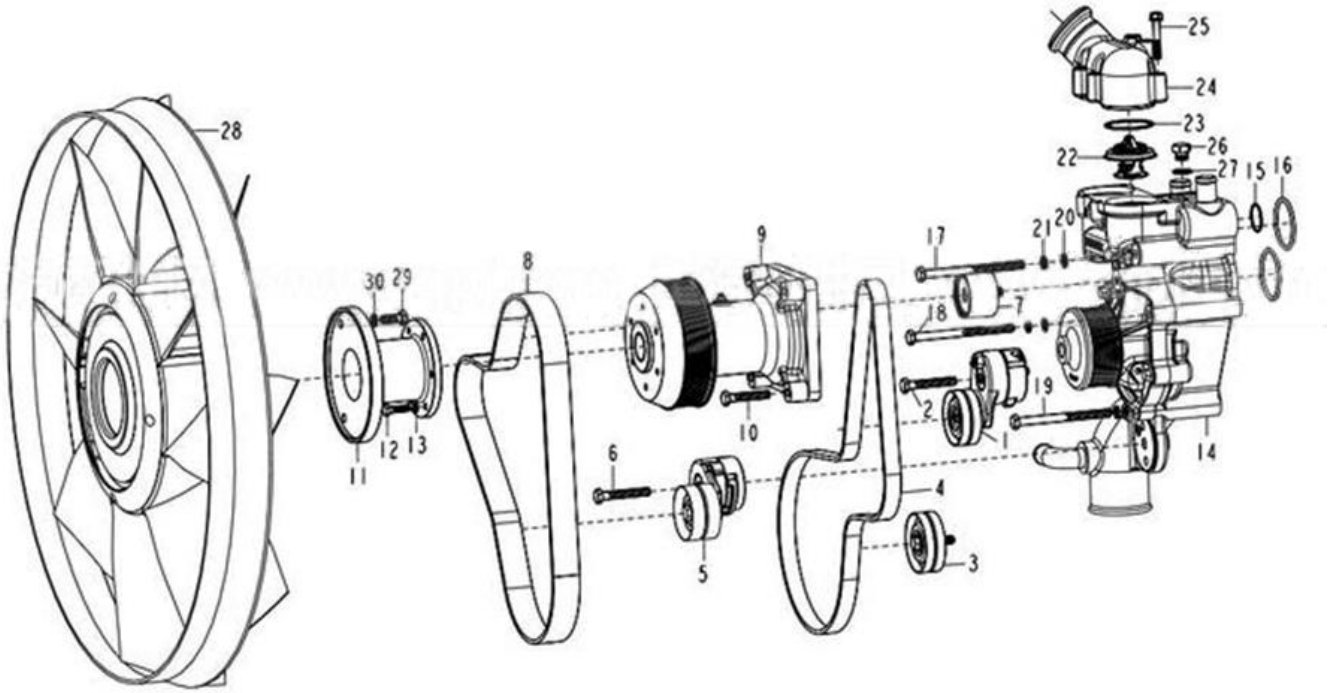

WATER PUMP & COOLING SYSTEM, D12 EURO-II ENGINE		
Serial	Name	Number
–	thermostat (optional)	vg1246060029
1	tensioning wheel	vg1246060001
2	hexagonal head bolt	q150b1065tf2
3	idler	vg1246060004
4	ribbed belt	vg1246060008
5	tensioning wheel	vg1246060002
6	hexagonal head bolt	q150b1065tf2
7	idler	vg1246060047
8	ribbed belt	vg1246060082
9	fan support	vg1246060070
10	hexagonal head bolt	q150b1055
11	middle flange	vg1246060046a
12	hexagonal head bolt	q150b0830
13	spring gasket	q40308
14	water pump	vg1246060042
15	O ring	vg1246060027

16	Oring	vg1246060028
17	hexagonal head bolt	q150b10150
18	hexagonal head bolt	q150b10135
19	hexagonal head bolt	q150b10125
20	flat gakset	q40110
21	spring gasket	q40310
22	thermostat	vg1246060024
23	O ring	vg1246060025
24	thermostat shell	vg1246060023
25	hexagonal flange bolt	q1840850
26	hexagonal head plug	q617b16
27	compound sealing gasket	vg9003080006
28	ϕ758 silicone oil fan	vg1246060051
29	hexagonal head bolt	q150b1025
30	spring gasket	q40310

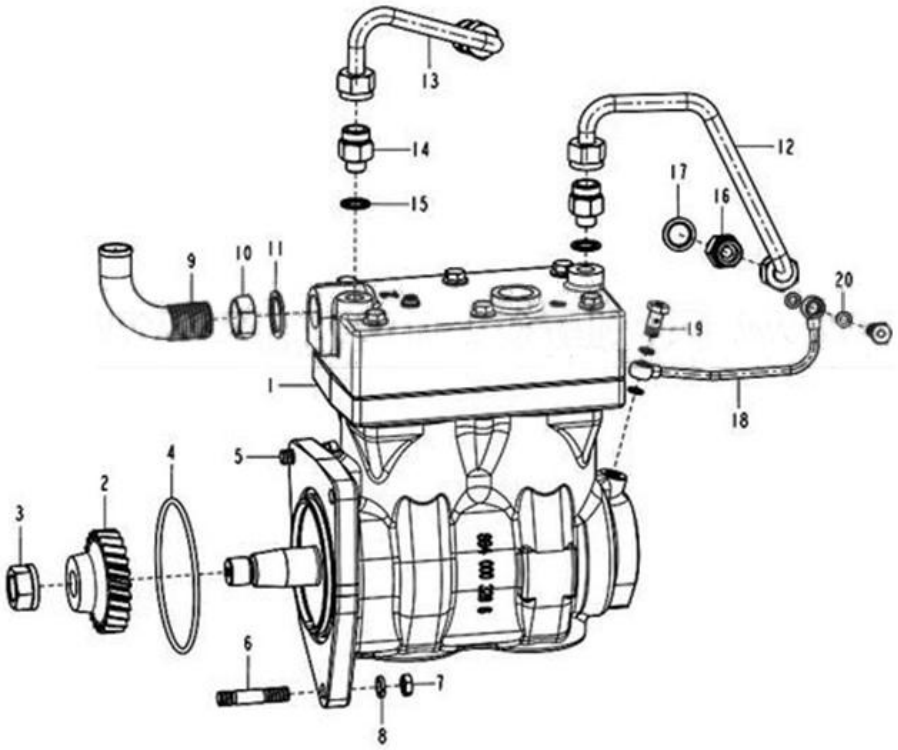

AIR COMPRESSOR, D12 EURO-II ENGINE		
Serial	Name	Number
1	air compressor assy	vg1246130008
2	air compressor gear	vg1246130009
3	hexagon nut	vg1246130010
4	O-sealing ring	vg1246130012
5	hexagonal head bolt	q150b1030
6	double head bolt	q1201040f3
7	hexagon nut	q340b10
8	spring gasket	q40310
9	air inlet pipe connector	vg1246130016
10	hexagon nut	190003559778
11	gasket	vg2600130037
12	water-inlet pipe	vg1246130003a
13	water-outlet pipe	vg1246130020a
14	pipe connecting joint	vg1246130021
15	compound sealing gasket	vg9003080005
16	pipe connecting joint	vg1246130022
17	compound sealing gasket	vg9003080006
18	oil-inlet pipe	vg1246130006
19	hollow bolt	190003962607
20	compound sealing gasket	vg9003080003

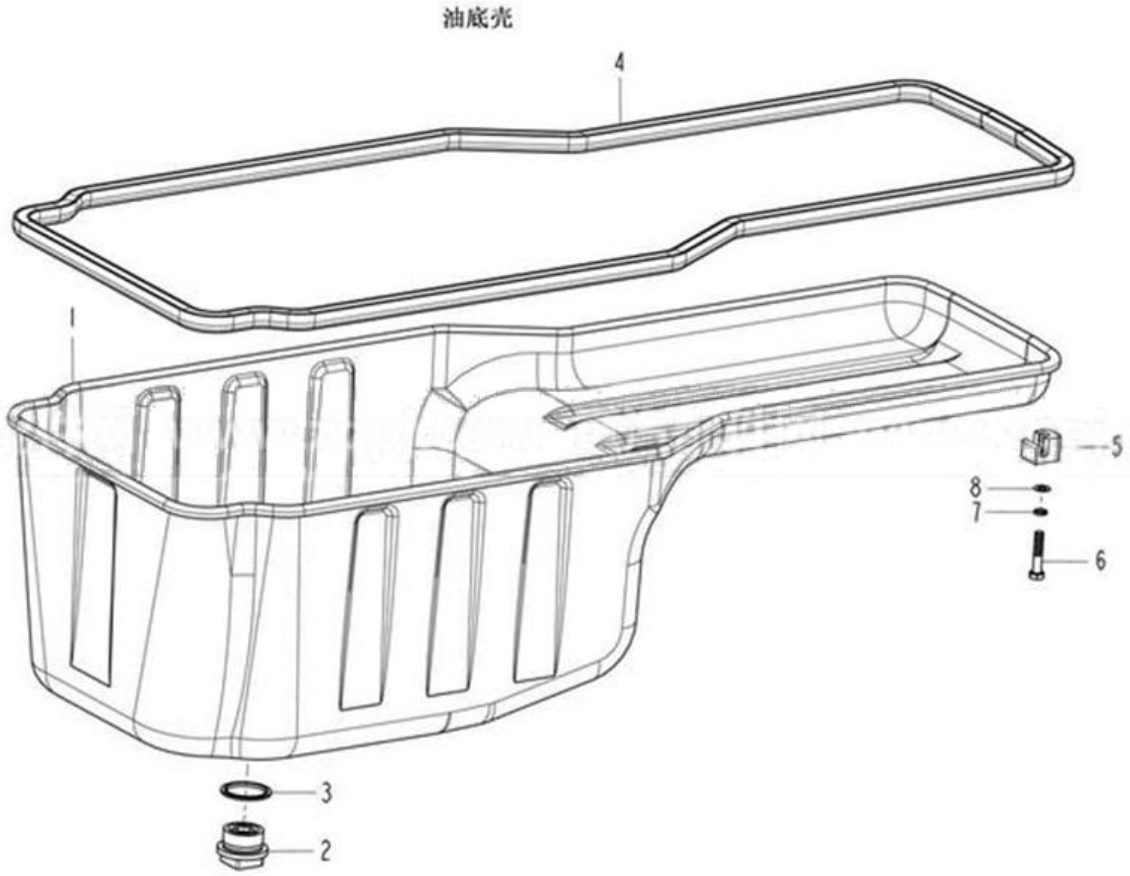

OIL PAN, D12 EURO-II ENGINE		
Serial	Name	Number
1	oil pan assy	vg1246150010
2	magnetic plug	vg2600150108
3	sealing gasket	vg2600150106
4	oil pan sealing gasket	vg1246150016
5	oil pan support	vg14150046
6	hexagonal head bolt	q150b0840
7	flat gasket	q40108
8	spring gasket	q40308