SINOTRUK

D12 ENGINE, EURO III

SPARE PARTS CATALOG

https://www.sinosoon.com Email:market@sinosoon.com

INDEX

CYLINDER BODY	Page 3
WATER PUMP & COOLING SYSTEM	Page 6
AIR COMPRESSOR	Page 8
OIL PAN	Page 9
CRANKSHAFT & FLYWHEEL	Page 10
CYLINDER HEAD	Page 11
OIL PUMP & FILTER	Page 13
INTAKE & EXHAUST SYSTEM	Page 14
VALVE SYSTEM	Page 17
PISTON & CONNECTING ROD	Page 19
PTO	Page 20
FUEL SUPPLYING	Page 21
ELECTRICAL SYSTEM	Page 25

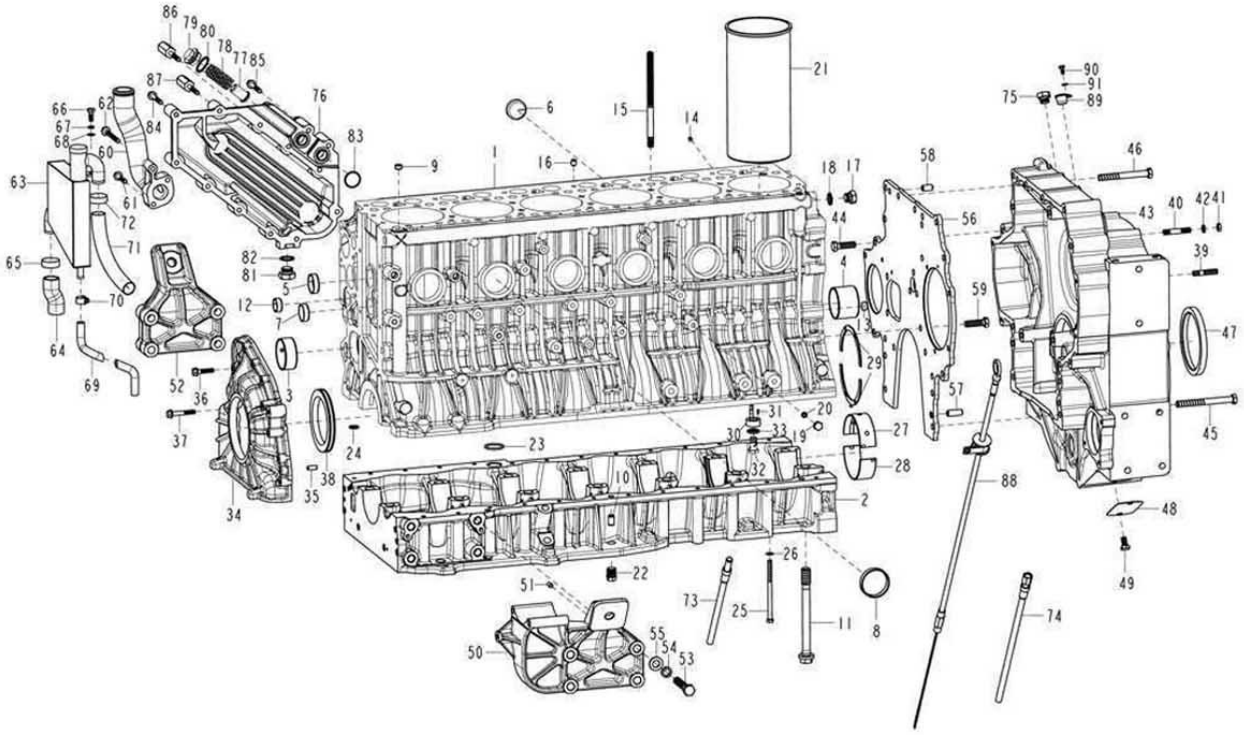

CYLINDER BODY			
D12 ENGINE, EURO-III			
Serial	Number	Name	Quantity
-	AZ1246010049	cylinder body assy	1
0	D12.42-30	420hp SINOTRUK D12-III	
0	D12.38-30	380hp SINOTRUK D12-III	
1	AZ1246010040	cylinder body	1
2	AZ1246010029	crankshaft	1
3	VG1246010042	camshaft bushing	6
4	VG1246010043	camshaft bushing	1
5	190003989289	plug	9
6	VG1246010044	plug	1
7	VG1246010041	plug	2
8	VG1246010046	plug	6
9	VG1246010048	plug	2
10	VG1246010032	positioning pin	3
11	VG1246010033	main bearing bolt	14
12	190003989204	plug	2
13	190003989480	plug	1
14	VG1540040011	plug for oil hole	1

15	VG1246010093	cylinder cap bolt	14
16	Q5211016	column pin	12
17	Q617B18	hex head screw plug	3
18	VG9003080007	compound sealing ring	3
19	VG1246010129	inner hex screw plug	1
20	VG9003080003	compound sealing ring	1
21	VG1246010028	cylinder sleeve	6
22	VG1246010055	screw plug	2
23	VG1400010032	sealing ring	1
24	VG1246010031	O sealing ring	1
25	Q150B08125	hex head bolt	24
26	Q41808	spring gasket	24
27	VG1246010034	upper bearing for main shaft	7
28	VG1246010035	lower bearing for main shaft	7
29	VG1246010036	thrust washer	2
30	VG1246010039	injector nozzle set	6
31	Q5280308	column pin	6
32	190003962621	hollow bolt	6
33	VG9003080005	compound sealing ring	6
34	VG1246010001	front cover housing	1
35	Q5210820	column pin	2
36	Q1840835	bolt	7
37	Q1840850	bolt	4
38	VG1246010005	front oil seal	1
39	VG9003813543	double head bolt body	10
40	Q1201045F3	double head bolt body	2
41	Q340B10	hex nut	12
42	Q40310	spring gasket	12
43	AZ1246010019	flywheel housing	1
44、59	Q150B1240TF2	hex head bolt	4
45	Q150B12120TF2	hex head bolt	11
46	Q150B12105TF2	hex head bolt	2
47	VG1047010050	rear oil seal	1
48	VG1800210011	watching hole cap	1
49	Q150B1018	hex head bolt	2
50	VG1246010022	front left support	1
51	Q5210814	column pin	2
52	VG1246010023	front right support	1

53	Q150B1475TF2	hex head bolt	8
54	Q40314	spring gasket	8
55	Q40114	flat gasket	8
56	VG1246010025	flywheel housing transition plate	1
57	Q5211232	column pin	1
58	Q5211222	column pin	1
59	Q150B1240TF2	hex head bolt	4
60	VG1246010085	oil inlet pipe seat	1
61	Q1840845	bolt	2
62	Q1840890	bolt	1
63	VG1246010086	filter set	1
64	VG1246010100	air inlet pipe	1
65、72	190003989301	clamp for soft pipe	2
66	Q150B0820	hex head bolt	2
67	Q40308	spring gasket	2
68	Q40108	flat gasket	2
69	VG1246010101	fuel return soft pipe	1
70	190003989336	clamp for soft pipe	2
71	VG1246010102	exhaust pipe	1
72	1.90004E+11	clamp for soft pipe	1
73	VG1246010096	connecting joint set	1
74	VG2600010705	set below oil level gauge	1
75	Q617B18	hex screw plug	1
76	VG1246070005	oil cooler cover	1
77	VG1246070006	safety valve	1
78	VG1246070007	safety valve spring	1
79	190003962051	hex head column plug	1
80	VG9003080012	compound sealing ring	1
81	Q617B20	screw plug	1
82	VG9003080008	compound sealing ring	1
83	VG1246070010	O sealing ring	2
84	Q1840855	bolt	7
85	Q1840870	bolt	4
86	VG1246070028	supporting bolt	1
87	VG1246070080	supporting bolt	1
88	VG1246150001	oil level gauge set	1

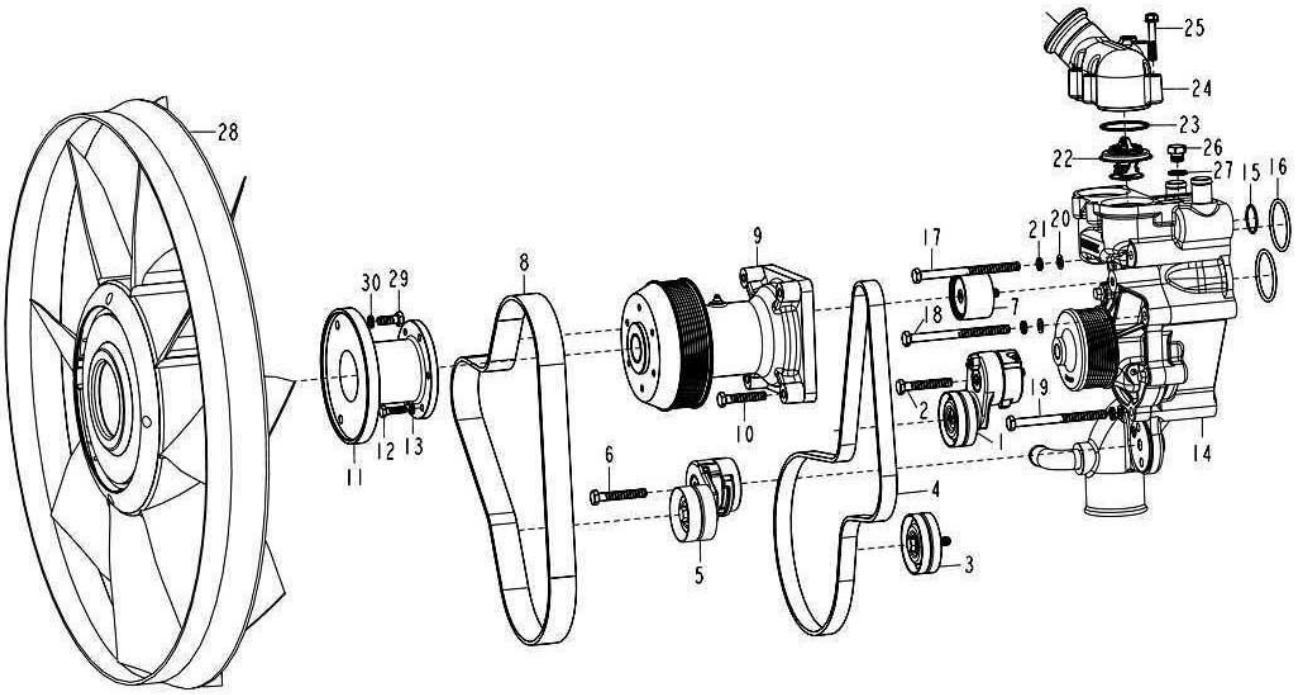

WATER PUMP & COOLING SYSTEM			
D12 ENGINE, EURO-III			
Serial	Number	Name	Quantity
1	VG1246060001	automotive tenshioning wheel	1
2	Q150B1065TF2	hex head bolt	1
3	VG1246060004	idler	1
4	VG1246060008	poly V belt	1
5	VG1246060002	tenshioning wheel assy	1
6	Q150B1065TF2	hex head bolt	1
7	VG1246060047	idler	1
8	VG1246060082	poly V belt	1
9	VG1246060070	fan support	1
10	Q150B1055	hex head bolt	4
11	VG1246060045	middle flange	
11	VG1246060046A	middle flange	1
12	Q150B0830	hex head bolt	6
13	Q40308	spring gasket	6
14	VG1246060042	water pump assy	1
15	VG1246060027	O ring	1
16	VG1246060028	O ring	2
17	Q150B10150	hex head bolt	3
18	Q150B10135	hex head bolt	1

19	Q150B10125	hex head bolt	1
20	Q40110	flat gasket	5
21	Q40310	spring gasket	5
22	VG1246060024	thermostat	2
22	VG1246060029	thermostat (optional)	2
23	VG1246060025	O ring	2
24	VG1246060023	housing of thermostat	1
25	Q1840850	hex head bolt	4
26	Q617B14	hex head screw plug	1
27	VG9003080005	compound gasket ring	1
28	VG1234060034	ϕ646 ring form silicone oil fan	
28	VG1246060030	ϕ704 ring form silicone oil fan	1
28	VG1246060051	ϕ758 ring form silicone oil fan	
29	Q150B1025	hex head bolt	3
30	Q40310	spring gasket	3

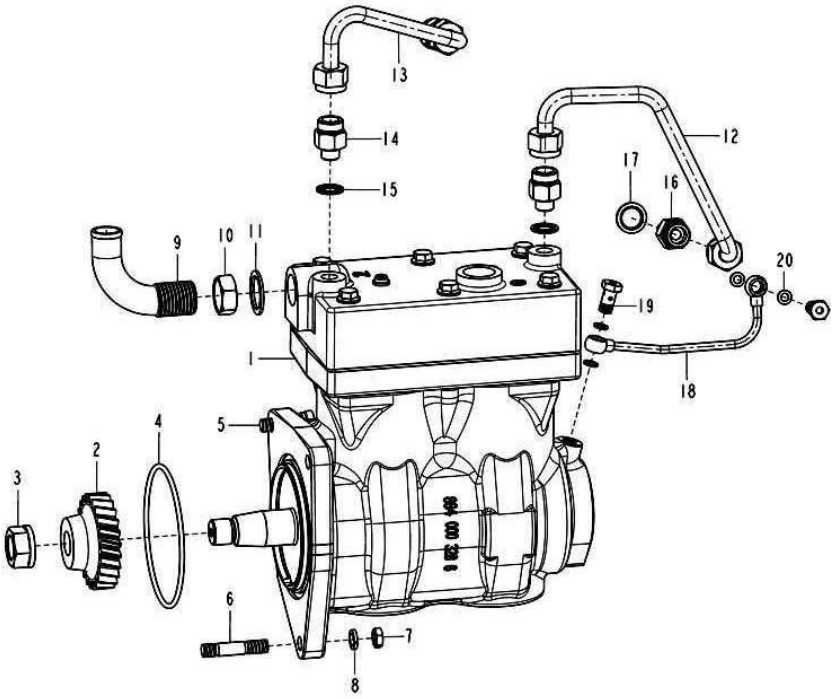

AIR COMPRESSOR			
D12 ENGINE, EURO-III			
Serial	Number	Name	Quantity
1	VG1246130008	air compressor	1
2	VG1246130009	air compressor gear	1
3	VG1246130010	hex nut	1
4	VG1246130012	O ring	1
5	Q150B1030	hex head bolt	1
6	Q1201040F3	double head bolt	2
7	Q340B10	hex nut	2
8	Q40310	spring gasket	3
9	VG1246130016	connet joint for intake pipe	1
10	190003559778	hex nut	1
11	VG2600130037	gasket	1
12	VG1246130003	water inlet pipe	1
13	VG1246130020	water outlet pipe	1
14	VG1246130021	pipe joint	2
15	VG9003080005	compound sealing gasket	2
16	VG1246130022	pipe joint	2
17	VG9003080006	compound sealing gasket	2
18	VG1246130006	oil inlet pipe	1
19	190003962607	hollow bolt	2
20	VG9003080003	compound sealing gasket	4

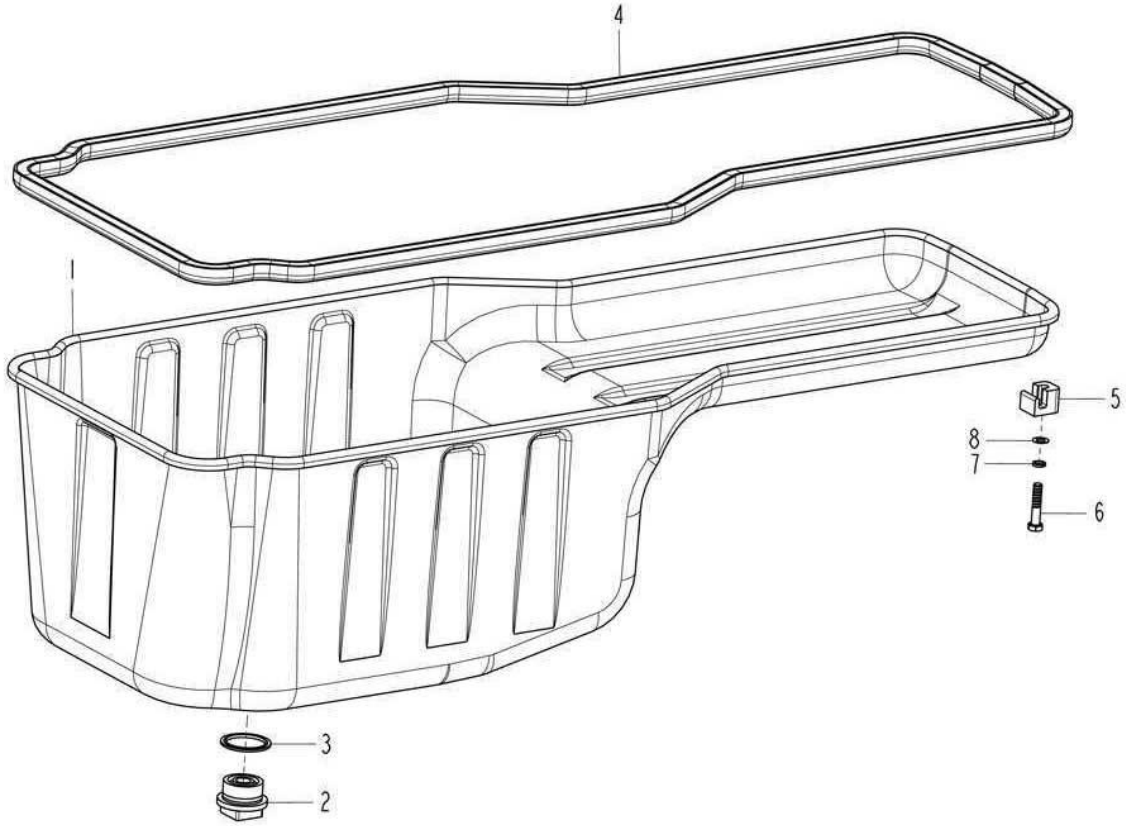

OIL PAN			
D12 ENGINE, EURO-III			
Serial	Number	Name	Quantity
1	VG1246150010	oil pan	1
2	VG2600150108	magnetic screw plug	1
3	VG2600150106	sealing ring	1
4	VG1246150016	sealing gasket for oil pan	1
5	VG14150046	supporting block	12
6	Q150B0840	hex head bolt	12
7	Q40108	flat gasket	12
8	Q40308	spring gasket	12

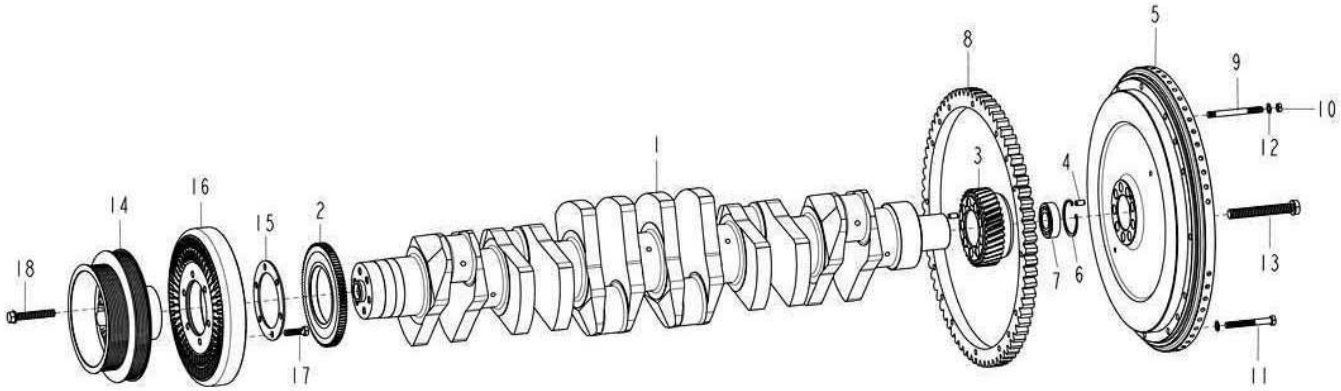

CRANKSHAFT & FLYWHEEL			
D12 ENGINE, EURO-III			
Serial	Number	Name	Quantity
1	AZ1246020013	crankshaft	1
2	VG1246020012	front gear wheel	1
3	VG1246020011	rear gear wheel	1
4	Q5210816	column pin	2
5	AZ1246020005A	flywheel	1
6	Q43062	elastic retaining ring	1
7	190003311416	ball bearing	1
8	VG2600020208	flywheel gear ring	1
9	Q1201090F3	double head column	2
10	Q340B10	hex nut	2
11	Q150B1085	hex head bolt	10
12	Q41810	spring gasket	12
13	VG1246020010	flywheel bolt	9
14	VG1246020001	belt wheel for crankshaft	1
15	VG1246020002	silicone oil suspension	1
16	VG1246020003	gasket ring	1
17	Q150B1030	hex head bolt	6
18	VG1246020004	hex head bolt	6

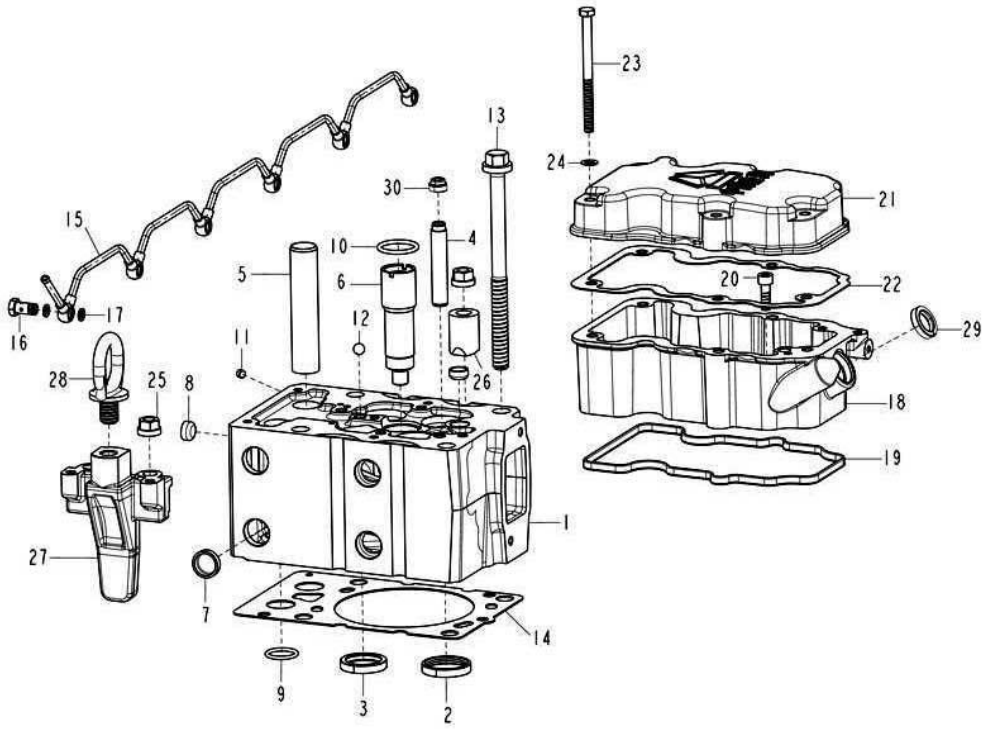

CYLINDER HEAD			
D12 ENGINE, EURO-III			
Serial	Number	Name	Quantity
-	AZ1246040010	cylinder head assy	6
1	AZ1246040011	cylinder head	6
2	VG1246040012	intake seat	12
3	VG1246040013	exhaust seat	12
4	VG1246040014	valve pipline	24
5	VG1246040015	valve push rod bushing	12
6	VG1246040016	injecter bushing	6
7	190003989725	plug	36
8	VG1246040031	plug	12
9	VG1246040018	sealing gasket	12
10	VG1246040019	sealing gasket	6
11	VG1540040011	plug for oil hole	6
12	VG1540040013	steel ball	6
13	VG1246040020	main bolt of cylinder head	24
14	VG1246040021	gasket	6
15	VG1246040001	exhaust pipe	1
16	VG1246040022	hollow bolt	6
17	Q72310	sealing gasket	12

18	VG1246040004A	lower cover	6
19	VG1246040023	sealing ring	6
20	Q218B0825	inner hex column head screw	12
21	VG1246040003	upper cover	6
22	VG1246040005	gasket	6
23	Q150B08110	hex head bolt	30
24	Q41808	spring gasket	30
25	VG1200040034	nut	14
26	VG1200040023A	clamp	10
27	VG1246040008	clamp for hanger	2
28	VG14010388	hanger screw	2
29	VG1540040022A	frame oil seal	6
30	VG1246050027	sealing set	24

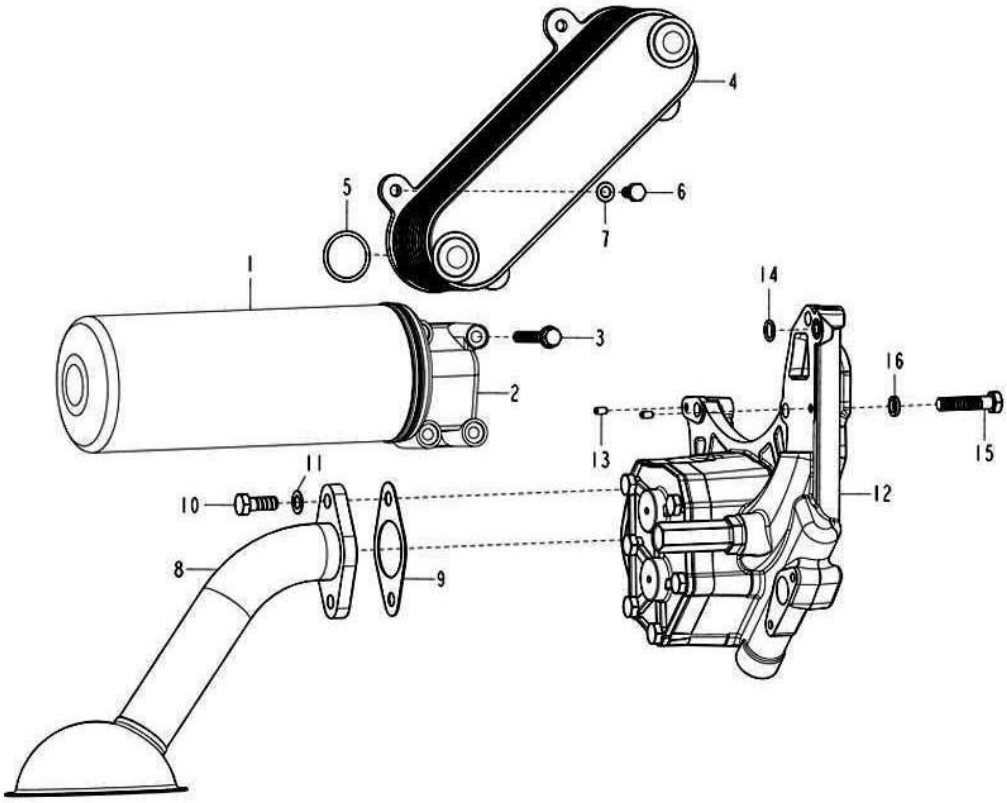

OIL PUMP & FILTER			
Serial	Number	Name	Quantity
1	VG1246070001	oil filter assy	1
1	VG1246070002	oil filter	1
2	VG1246070003	filter seat	1
3	Q1840860	hex bolt	4
4	VG1246070012	oil cooler core	1
5	VG1400010032	sealing ring	2
6	Q150B0816	hex head bolt	4
7	Q41808	spring gasket	4
8	VG1246070014	suction filter	1
9	VG140778	gasket	1
10	Q150B1025	hex head bolt	2
11	Q41810	spring gasket	2
12	VG1246070022	oil pump	1
13	Q5210510	column pin	2
14	VG1246070036	O ring	1
15	Q150B1045	hex head bolt	3

16	Q40310	spring gasket	3

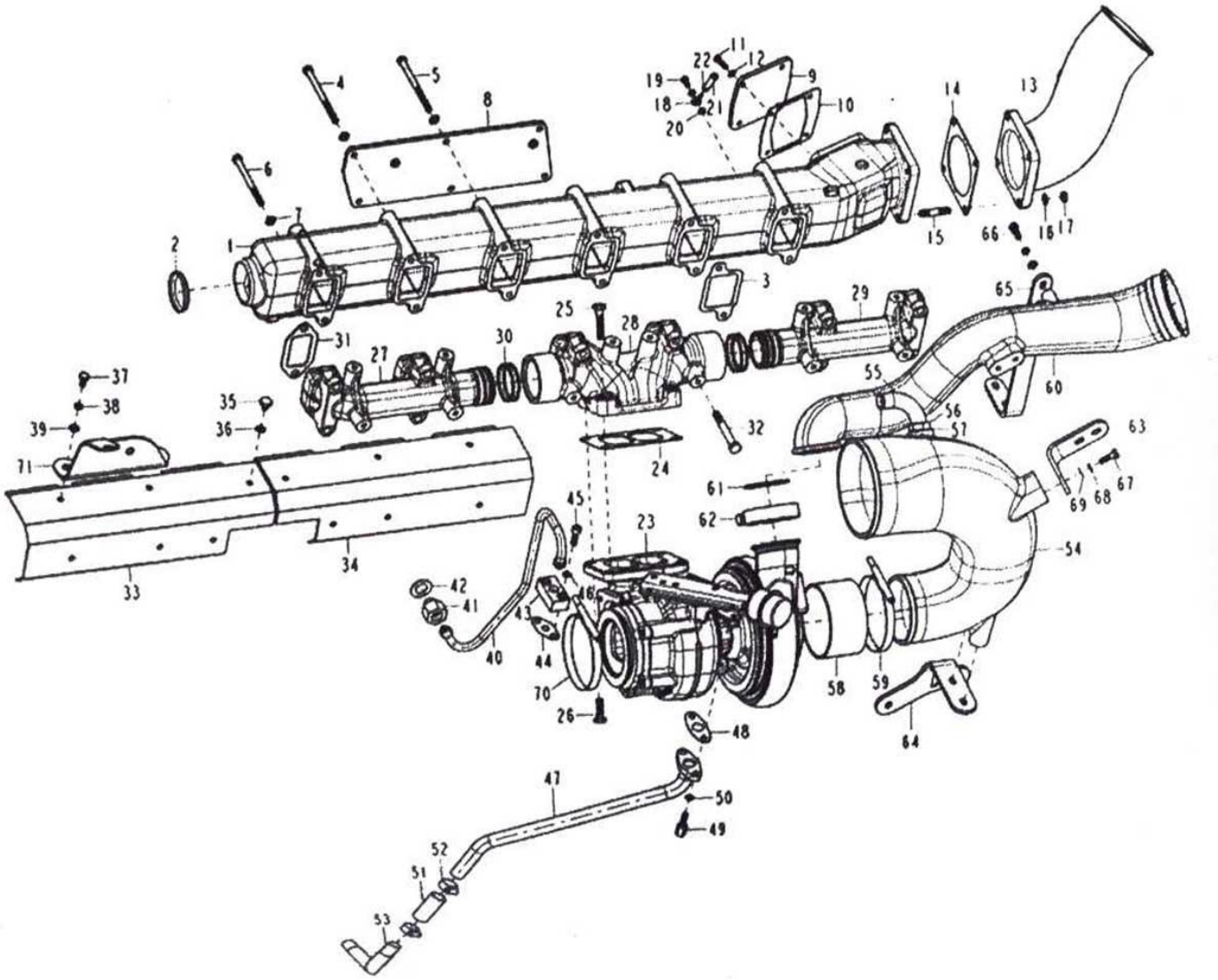

INTAKE & EXHAUST SYSTEM			
D12 ENGINE, EURO-III			
Serial	Number	Name	Quantity
-	VG1246110001	intake pipe assy	1
1	VG1246110002	intake pipe	1
2	190003989286	plug	1
3	VG1246110006	intake pipe gasket	6
4	Q150B08125	hex head bolt	2
5	Q150B08115	hex head bolt	7
6	Q150B08110	hex head bolt	3
7	Q41808	spring gasket	12
8	VG1246110044	support assy	1
9	VG1540110011A	intake pipe plate	1
10	VG1540110018A	gasket for plate	1

11	Q150B0620	hex head bolt	4
12	Q41806	gasket	4
13	VG1246110100	intake connecting pipe	1
13	VG1246110093	intake connecting pipe	
14	VG1560110180	gasket	1
15	Q1201030F3	double head column	4
16	Q41810	spring gasket	4
17	Q340B10	hex nut	4
18	VG1540110038	connect joint	1
19	VG1540110037	hollow bolt	1
20	VG9003080003	compound sealing ring	2
21	VG1246110106	rubber soft pipe	1
22	190003989300	clamp	2
23	VG1246110021	turbo charger	1
24	VG1540110017	gasket of turbo	1
25	VG1500110002	heat resist bolt	2
26	VG1246110058	turbo bolt	2
27	VG1246110108	front exhaust branch pipe	1
28	VG1246110109	middle exhaust branch pipe	1
29	VG1246110110	rear exhaust branch pipe	1
30	VG1246110027	sealing ring	8
31	VG1246110028	exhaust pipe gasket	6
32	VG1246110052	locking bolt	12
33	VG1246110111	heat insulation cover	1
34	VG1246110112	heat insulation cover	1
35	VG1500110963	heat resist bolt	12
36	Q40208	big gasket	12
37	VG1246110113	heat resist bolt	
38	Q40308	spring gasket	
39	Q40108	flat gasket	
40	VG1246110053	oil inlet pipe	1
41	VG1246110046	pipe seat	1
42	VG9003080007	compound sealing ring	1
43	VG1560110152	oil inlet pipe flange	1
44	VG609E110050	oil inlet pipe gasket	1
45	Q218B0825	inner hex column head screw	2
46	VG188250083	self locking gasket	2
47	VG1246110055	oil return pipe	2

48	VG2600110048	oil return pipe flange gasket	1
49	VG1460070014	oil return pipe bolt	2
50	VG188250083	self locking gasket	2
51	VG2600070071	oil return soft pipe	1
52	190003989301	clamp	2
53	VG1246110022	elbow pipe for oil return	1
54	VG1246110095	air intake pipe of turbo	1
55	VG1246130016	air intake pipe joint	1
56	190003559778	hex nut	1
57	VG2600130037	gasket	1
58	VG1246110102	rubber soft pipe	1
59	190003989315	soft pipe clamp	2
60	VG1246110099	turbo connecting elbow pipe	1
60	VG1246110094	turbo connecting elbow pipe	
61	VG190320035	sealing ring	1
62	VG1560110226	clip	1
63	VG1246110097	fixed support 1	1
64	VG1246110098	fixed support 2	1
65	VG1246110104	fixed support 4	1
66	Q150B0820	hex head bolt	2
67	Q150B0825	hex head bolt	10
68	Q40308	spring gasket	12
69	Q40108	flat gasket	12
70	VG1034110100	clamp	1
71	VG1246110205	support	1

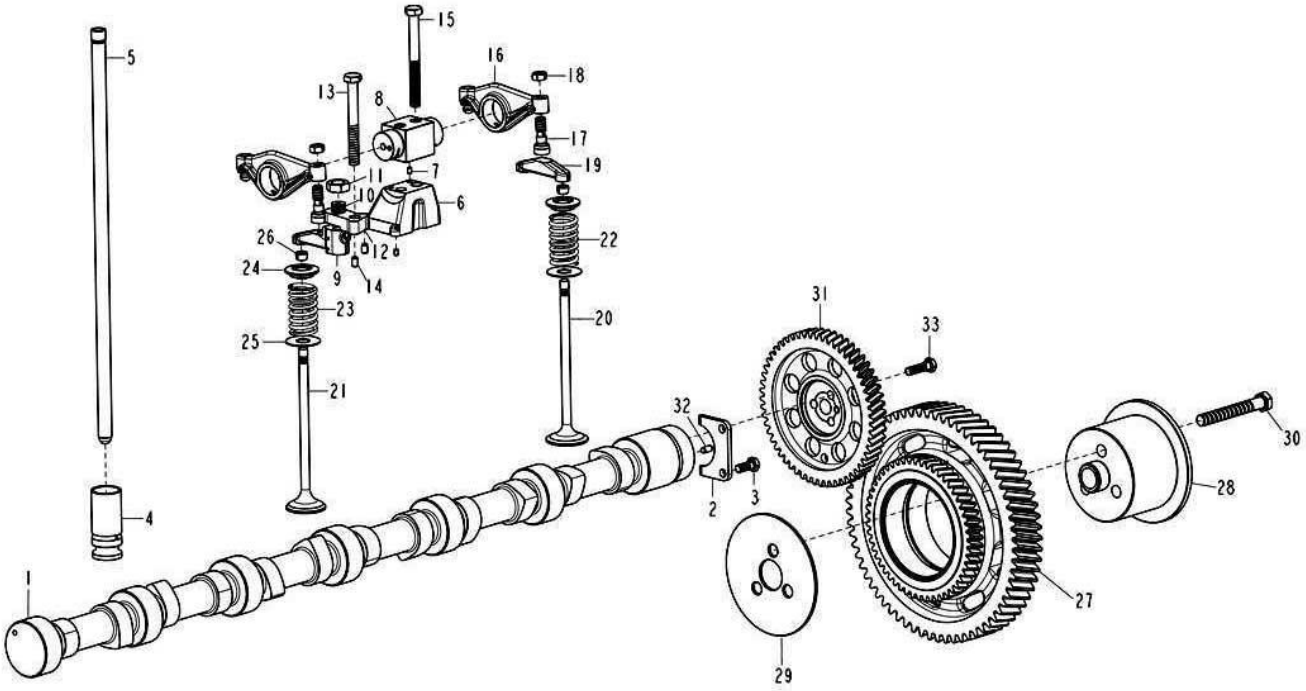

VALVE SYSTEM			
D12 ENGINE, EURO-III			
Serial	Number	Name	Quantity
1	VG1246050038	camshaft	1
2	VG1246050039	thrust washer	1
3	Q150B0820TF2	hex head bolt	2
4	VG1246050029	valve column	12
5	VG1246050020	valve rod	12
6	VG1246050005	rocking arm seat	6
7	Q5210406	column pin	24
8	VG1246050006	rocking arm shaft	6
9	VG1246050050	EVB exhaust valve bridge	6
10	VG1246050055	EVB adjusting screw	6
11	VG1246050056	EVB adjusting nut	6
12	VG1246050057A	EVB plate	6
13	Q150B1095TF2	hex head bolt	6
14	Q5210614	column pin	12
15	Q150B10100TF2	hex head bolt	12
16	VG1246050008	rocking arm assy	12

17	VG1246050011	valve bridge adjusting screw	12
18	VG2130050065	valve adjusting nut	12
19	VG1246050013	valve bridge	12
20	VG1246050021	air intake valve	12
21	VG1246050022	air exhaust valve	12
22	VG1246050023	intake valve spring	12
23	VG1246050024	exhaust valve spring	12
24	VG1246050025	upper seat for valve spring	24
25	VG1246050026	lower seat for valve spring	24
26	VG1246050028	clamp for valve	48
27	VG1246050060	middle gear assy	1
28	VG1246050034	middle gear shaft assy	1
29	VG1246050035	thrust washer	1
30	Q150B1290TF2	hex head bolt	3
31	VG1246050036	camshaft gear	1
32	Q5210612	column	1
33	Q150B0830TF2	hex head bolt	3

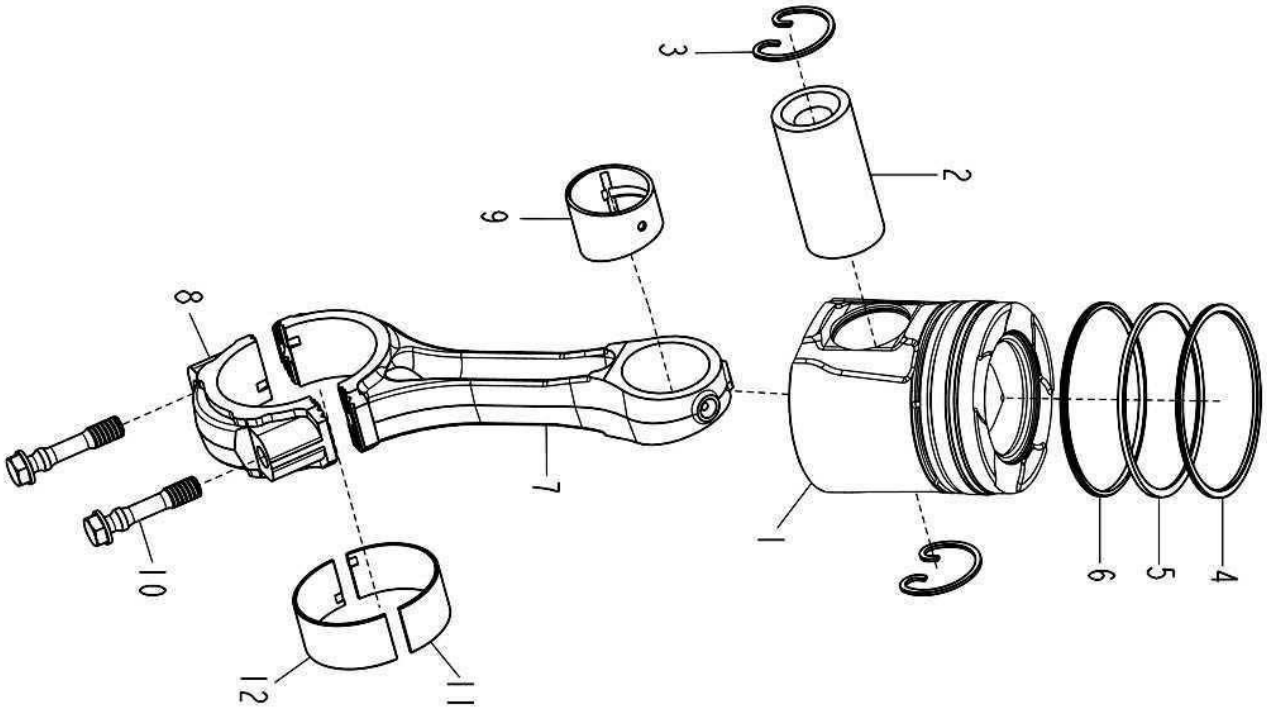

PISTON & CONNECTING ROD			
D12 ENGINE, EURO-III			
Serial	Number	Name	Quantity
-	AZ1246030007	connecting rod	6
1	VG1246030001	piston	6
2	VG1246030002	piston pin	6
3	VG1246030003	piston pin retaining ring	12
4	VG1246030004	keystone ring	6
5	VG1246030005	cone type ring	6
6	VG1246030006	oil ring	6
7	AZ1246030008	connecting rod body	6
8	AZ1246030009	connecting rod cover	6
9	VG1246030010	connecting rod bushing	6
10	VG1246030013	connecting rod bolt	12
11	VG1246030011	connecting rod upper bearing	6
12	VG1246030012	connecting rod lower bearing	6

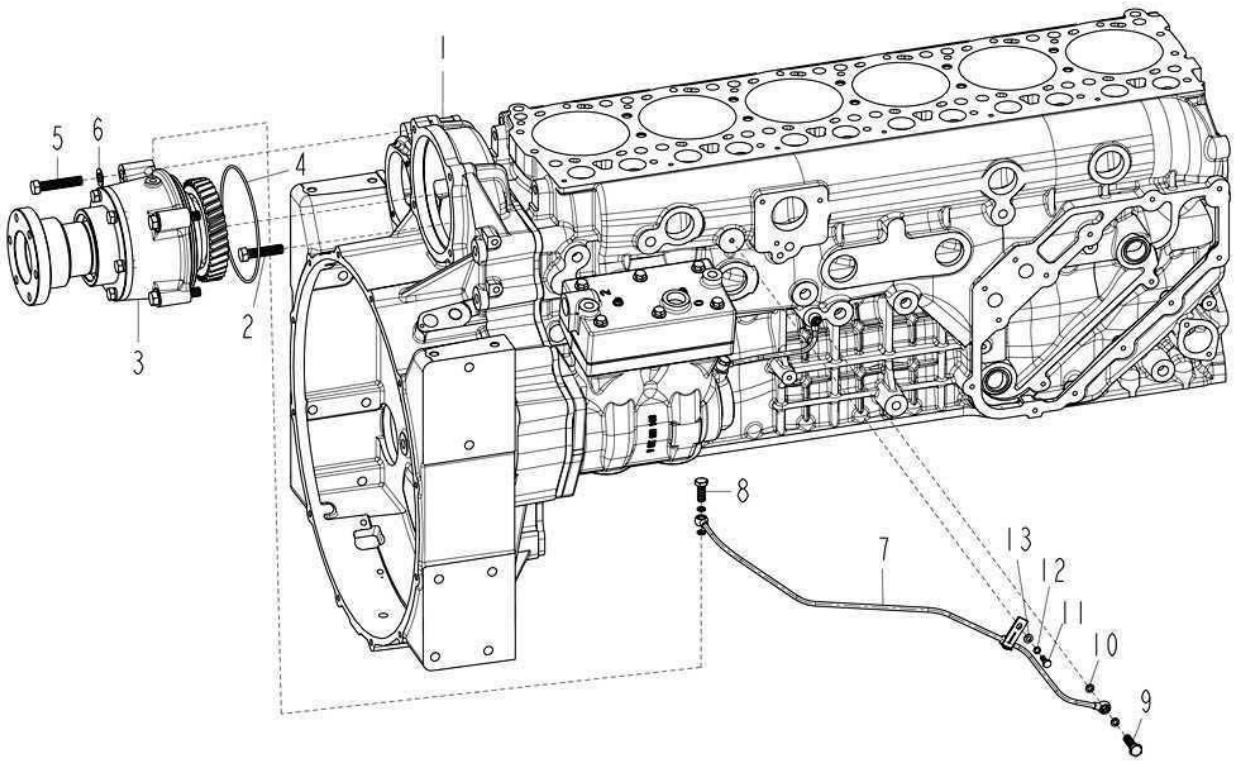

PTO			
D12 ENGINE, EURO-III			
Serial	Number	Name	Quantity
1	AZ1246010020	fly wheel housing	1
2	Q150B1250TF2	hex head bolt	2
3	VG1246010060	PTO assy	1
4	VG1246010016	O sealing ring	1
5	Q150B1260	hex head bolt	4
6	Q41812	spring gasket	4
7	VG1246010070	oil inlet pipe for PTO	1
8	VG1246010071	hollow bolt	1
9	VG1246010072	hollow bolt	1
10	VG9003080003	compound sealing gasket	5
11	Q150B0616	hex head bolt	1
12	Q40106	flat gasket	1
13	Q40306	spring gasket	1

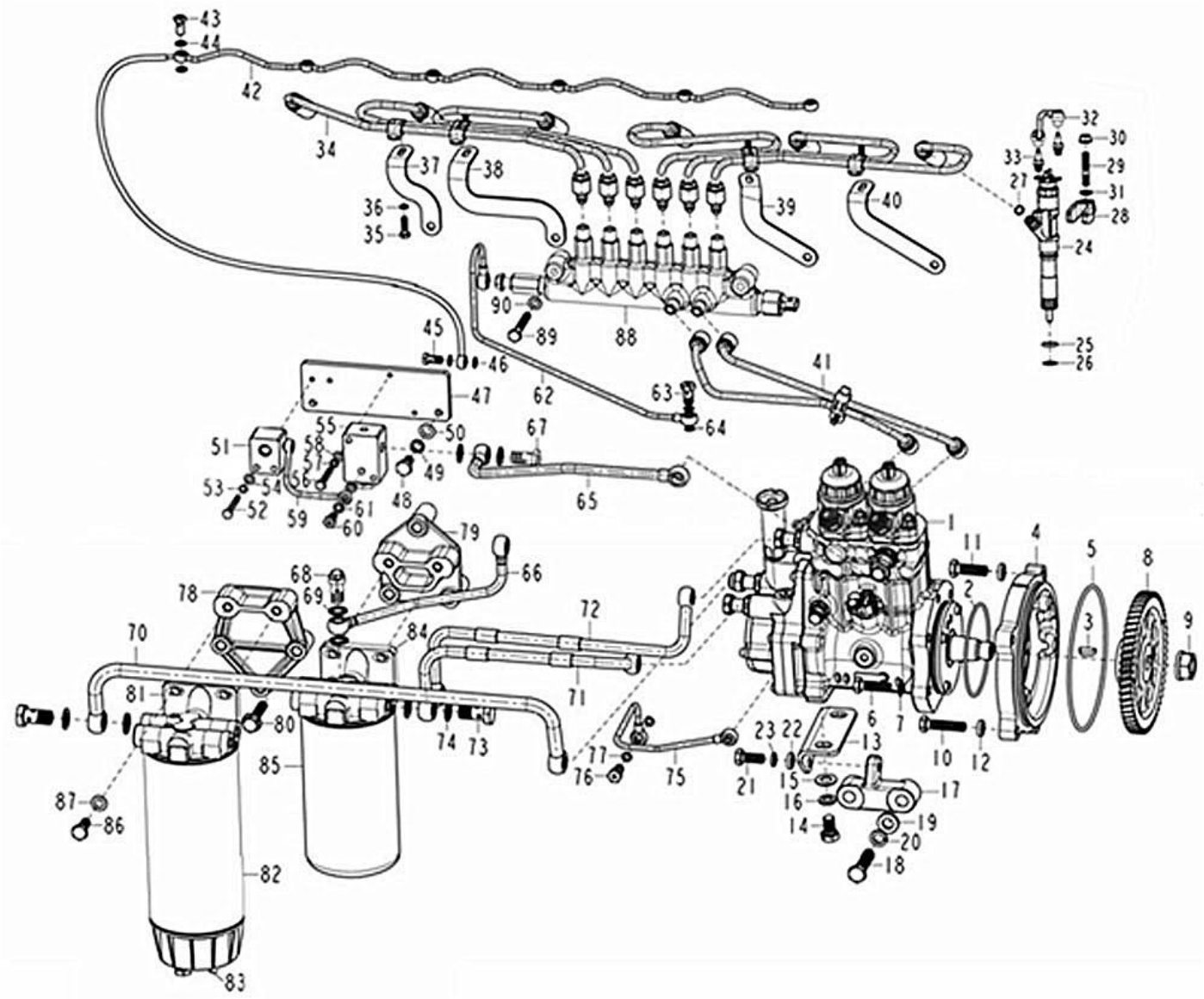

FUEL SUPPLYING		
D12 ENGINE, EURO-III		
Serial	Number	Name
1	VG1246080050	Fuel injection pump
2	VG1246080028	O-ring
3	R61540080312	Woodruff key
4	VG1246080056	Flange
5	VG1246080027	O-ring
6	Q150B1035TF2	Hex head bolt

7	Q40110	Washer
8	VG1246080029	Fuel injection pump gear
9	VG1246130010	Hexagon nut
10	Q150B1045TF2	Hex head bolt
11	Q150B1035TF2	Hex head bolt
12	VG1246080042	Washer
13	VG1246080054	Bracket
14	Q150B1220	Hex head bolt
15	Q40112	Washer
16	Q40312	Spring washer
17	VG1246080055	Bracket
18	Q150B1250	Hex head bolt
19	VG1246080044	Washer
20	Q40312	Spring washer
21	Q150B1025	Hex head bolt
22	VG1246080042	Washer
23	Q40310	Spring washer
24	VG1246080051	Fuel injector
25	VG1540080018A	O-ring
26	VG1540080019B	Washer
27	VG1540080095	O-ring
28	VG1246080039	Fuel injector clamp
29	VG1099040030	Hex head bolt
30	VG1099040010	Nut
31	VG1540080024	Spherical washer
32	VG1099089065	Fuel return pipe
33	VG1099089064	Tie-in
34	VG1246080001	Injection pipe assembly
35	Q150B0620	Hex head bolt
36	Q41806	Spring washer
37	VG1246080066	Bracket
38	VG1246080067	Bracket
39	VG1246080068	Bracket
40	VG1246080069	Bracket
41	VG1246080070	Fuel injection pipe
42	VG1246080008	Fuel return pipe assembly
43	VG1246080077	Hollow bolt
44	VG1540080200	Sealing washer

45	190003962603	Hollow bolt
46	VG9003080002	Sealing washer
47	VG1540080070	Mounting plate
48	Q150B1020	Hex head bolt
49	Q40310	Spring washer
50	Q40110	Washer
51	VG1540080067	Fuel temp sensor bracket
52	Q150B0645	Hex head bolt
53	Q40306	Spring washer
54	Q40106	Washer
55	VG1540080071	Oil return bracket
56	Q150B0645	Hex head bolt
57	Q40306	Spring washer
58	Q40106	Washer
59	VG1246080079	Fuel return pipe
60	190003962603	Hollow bolt
61	VG9003080002	Sealing washer
62	VG1246080015	Common rail relief pipe
63	190003962607	Hollow bolt
64	VG9003080003	Sealing washer
65	VG1246080017	Fuel injection pump relief pipe
66	VG1246080013	Fuel filter relief pipe
67	190003962621	Hollow bolt
68	VG1540080022	Overflow valve
69	VG9003080005	Sealing washer
70	VG1246080019	Fuel pipe
71	VG1246080012	Fuel pipe
72	VG1246080011	Fuel pipe
73	VG1246080014	Hollow bolt
74	VG9003080006	Sealing washer
75	VG1246080016A	Oil pipe
76	190003962607	Hollow bolt
77	VG9003080003	Sealing washer
78	VG1246080020	Primary fuel filter bracket
79	VG1246080023	Final fuel filter bracket
80	Q1841050	Hex head bolt
81	VG1246080075	Primary fuel filter assembly
81	VG1246080088	Primary fuel filter body

82	VG1096080037	Fuel filter and drain valve with sensor
82	VG1540080211	Fuel filter
83	VG1096080034	Drain valve with water sensor
84	VG1246080086	Final fuel filter assembly
84	VG1246080089	Final fuel filter body
85	VG1540080110	Final fuel filter
86	Q150B1025	Hex head bolt
87	Q41810	Spring washer
88	R61540080016	Rail
89	Q150B0855	Hex head bolt
90	Q41808	Spring washer

ELECTRICAL SYSTEM

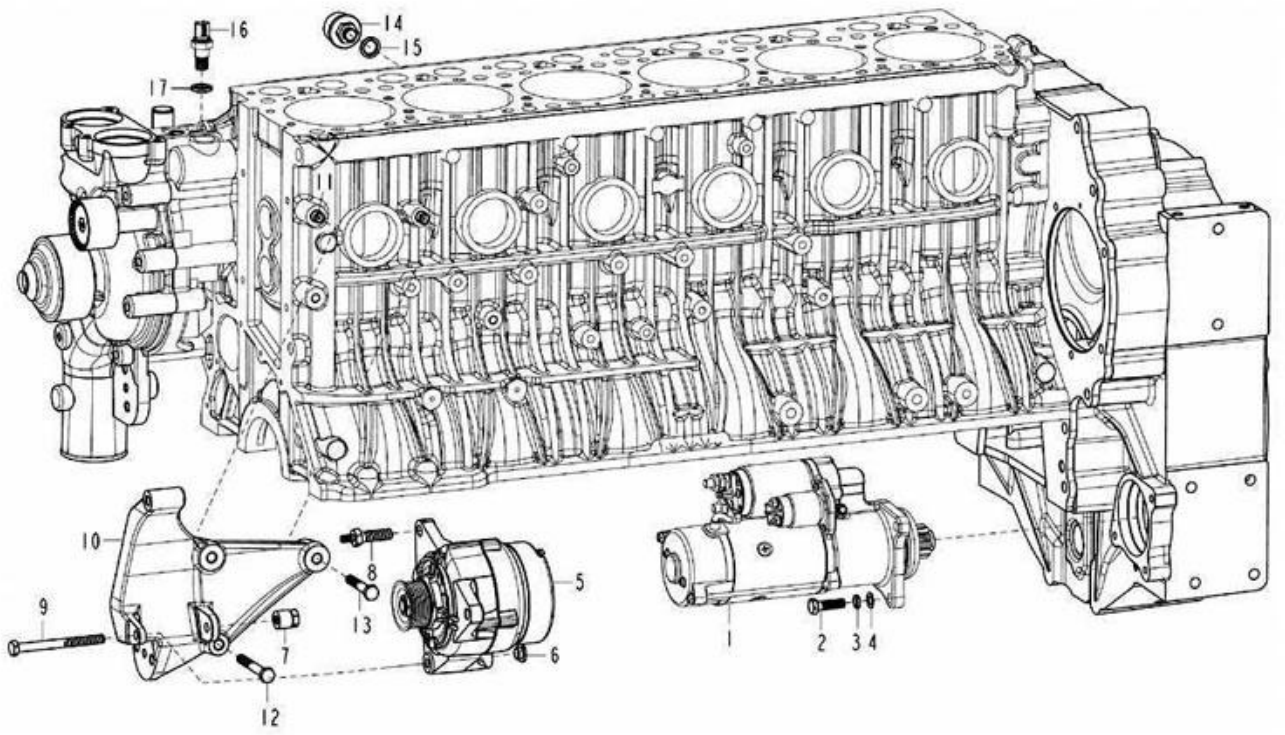

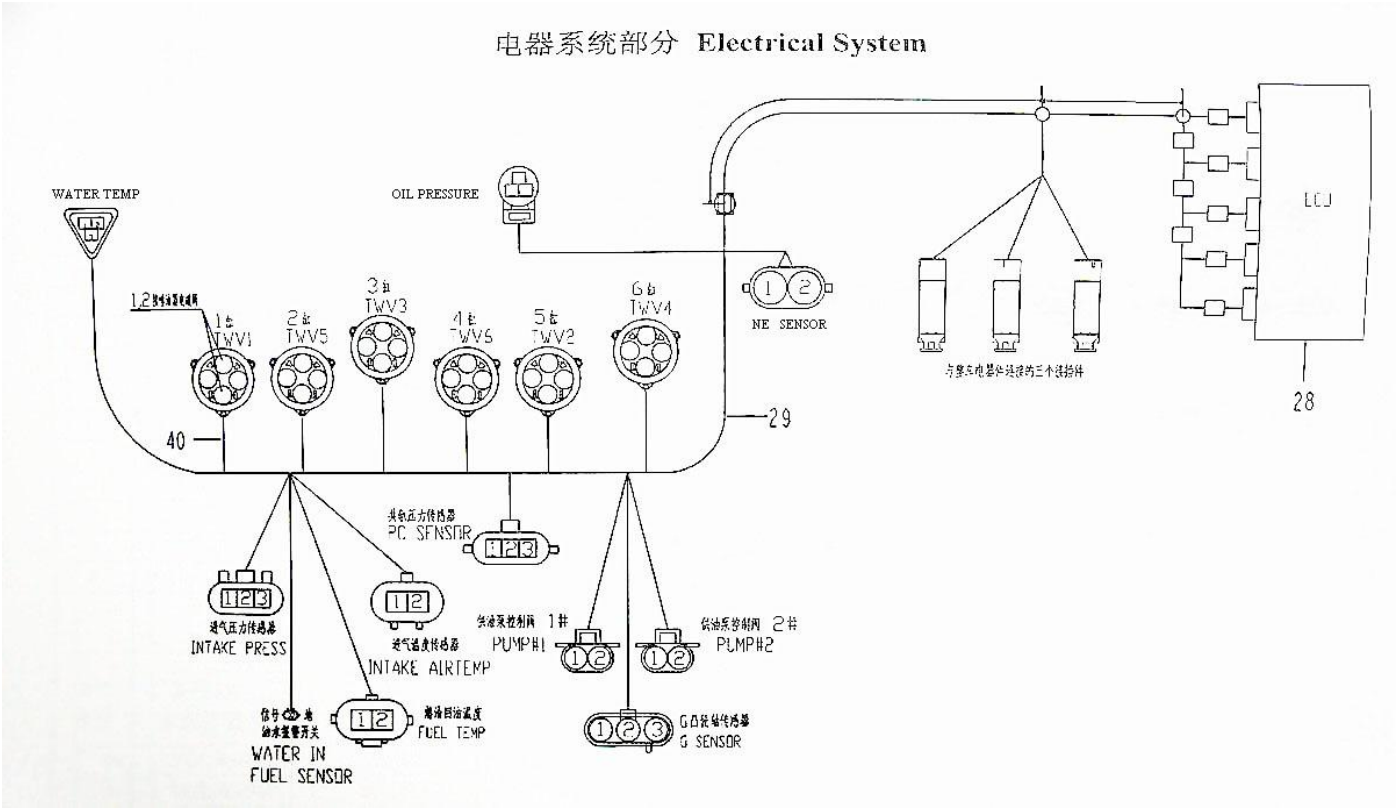

https://www.sinosoon.com Email:market@sinosoon.com

ELECTRICAL SYSTEM			
D12 ENGINE, EURO-III			
Serial	Number	Name	Quantity
1	VG1246090003	Starter motor	1
2	Q150B1035	Hex head bolt	3
3	Q40310	Spring washer	3
4	Q40110	Washer	3
5	VG1246090005	Alternator	1
6	VG1246090006	Bush	1
7	VG1246090007	Positioning nut	1
8	VG1246090027	Bolt	1
9	Q150B10110	Hex head bolt	1
10	VG1246090008	Bracket	1
11	VG1246090009	Positioning bush	2
12	Q150B1075	Hex head bolt	1
13	Q150B1060	Hex head bolt	2
14	VG1092090311	Pressure sensor	1
15	VG9003080007	Sealing washer	1
16	R61540090004	Coolant temp. sensor	1
17	VG9003080006	Sealing washer	1
18	R61540090003	Intake air temp. sensor	1
19	VG9003080006	Sealing washer	1
20	R61540090005	Fuel temp. sensor	1
21	VG1540090006	Sealing washer	1
22	R61540090007	Pressure sensor	1
23	Q150B0616	Hex head bolt	2
24	Q41806	Spring washer	2
25	R61540090008	Crankshaft speed sensor	1
26	Q150B0612	Hex head bolt	1
27	Q41806	Spring washer	1
28	R61540090002	ECU assembly	1
29	VG1246090031	Wire harness	1
29	VG1246090032A	Wire harness	
30	VG1246110206	Air cleaner bracket	
31	VG1246090034	Bracket	1
32	VG1246090035	Bracket	1
33	Q150B0816	Hex head bolt	6

34	Q41808	Spring washer	6
35	VG1246090024	Bracket	1
36	VG1246090025	Bracket	1
37	VG1246090037	Clamp	5
38	Q218B0610	Socket bolt	10
39	Q41806	Spring washer	10
40	VG1099090004	Fuel injector wire harness	6
41	Q150B0612	Hex head bolt	6
42	Q41806	Spring washer	6
43	VG1246090030	Bracket	6
44	Q41810	Spring washer	6
45	Q150B1228	Hex head bolt	
46	Q40312	Spring washer	
47	Q40112	Washer	2
48	VG1246090042	Bracket	
49	Q150B0825	Hex head bolt	2
50	Q40308	Spring washer	2
51	Q40108	Washer	2
52	190003171390	Plastic fastening tape	2