SINOTRUK

WD615, EURO II ENGINE SPARE PARTS CATALOG

Part-I

https://www.sinosoon.com Email:market@sinosoon.com

INDEX

CYLINDER BODY	Page 3
TENSIONING WHEEL	Page 5
OIL-WATER SEPARATOR	Page 6
OIL PAN	Page 7
WATER PUMP	Page 8
WATER PUMP & VENTILATOR	Page 9
FUEL PIPE	Page 11
CRANKSHAFT & FLYWHEEL	Page 13
CYLINDER HEAD	Page 15
COUPLER	Page 17
INJECTOR & FUEL PIPE	Page 18
VALVE MECHANISM	Page 20
AIR EXHAUST PIPE	Page 22
AIR INLET PIPE	Page 24

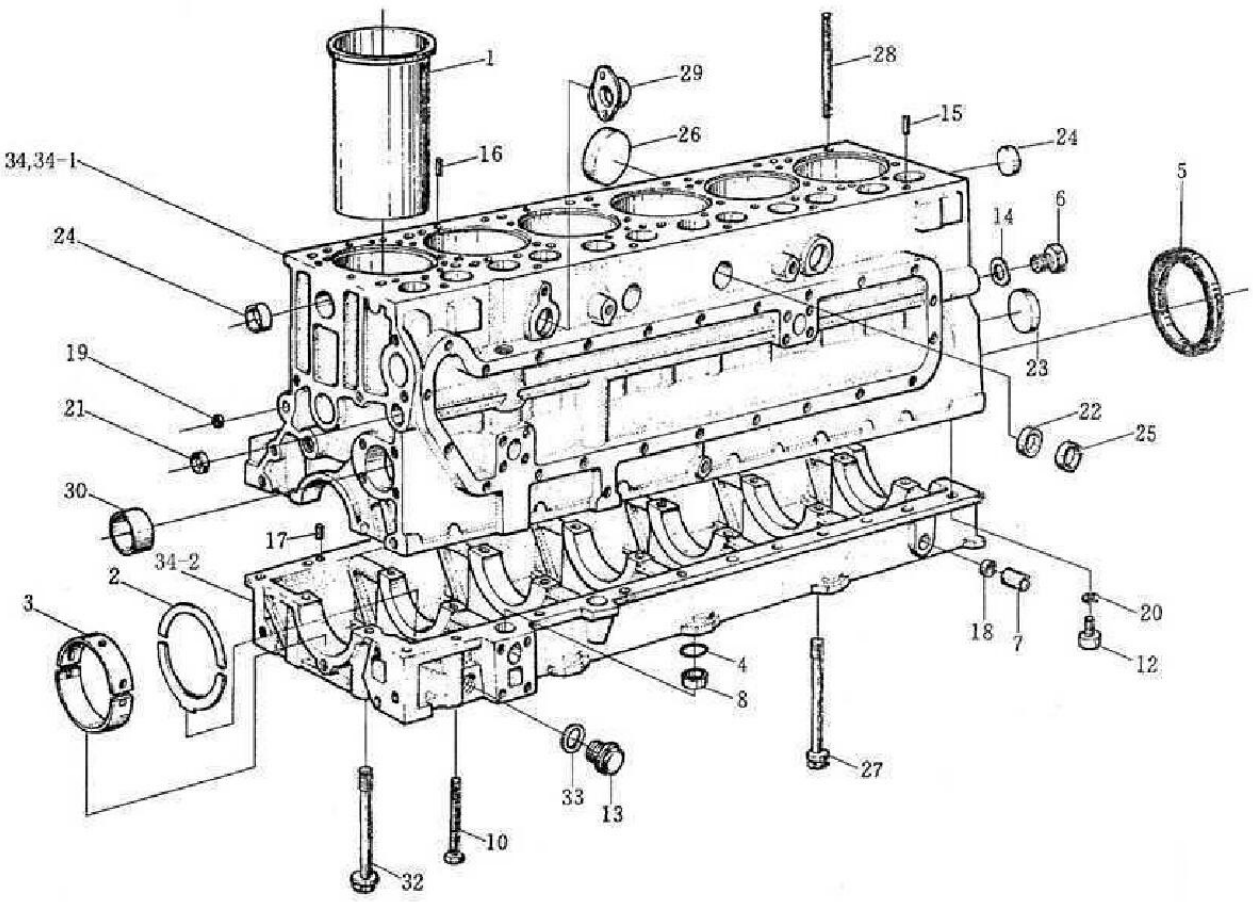

CYLINDER BODY, WD615-II			
Serial	Number	Name	Quantity
0	WD615．69	336hp	
0	WD615．47	371hp	
0	WD615．62	266hp	
0	WD615．87	290hp	
0	61500010816	engine	1
1	61500010344	cylinder liner	6
2	81500010125	thrust washer	2
3	81500010046	main shaft bearing	7
4	614 010134	sealing gasket	2
5	61500010100	oil seal for crankshaft	1
6	61460070011	rear plug screw of fuel pipe	1
7	612600070083	pipe for fule return	1
8	614 010120	pipe	2
10	90003802493	hexagon head bolt	2
12	90003862428	hexagon screw	22
13	90003962050	inside hexagon plug screw	1
14	90003098086	sealing gasket	1

15	90003901604	pin (12m6*20 DIN7)	6
16	90003909626	pin (6*12 D01481)	6
17	90003901604A	pin (12m6*26 D00007)	3
19	90003989480	plug (17/8 N5564)	2
20	188 250083	self-locking gasket	22
21	90003989204	plug	1
22	90003989289	plug (40/12-MS N5564)	4
23	90003989288	plug (65/14 N5564)	1
24	90003982121	plug (45/12 N5564)	4
25	90003989215	plug (45/12 N5564)	3
26	90003989210	plug (75/14 N5564)	6
27	614 010217	bolt for cap of main shaft	1
28	61500010185	bolt for cylinder cap	21
29	614 010279	pipe for ventilation	1
30	61560010029	bush for camshaft	7
32	614 010114	bolt for main shaft bearing	13
33	90003098086	sealing gasket (AKM NO5125)	1
34	61560010097A	cylinder body assy	1
34-1	61560010095B	cylinder body	1
34-2	61560010109	crankshaft case	1

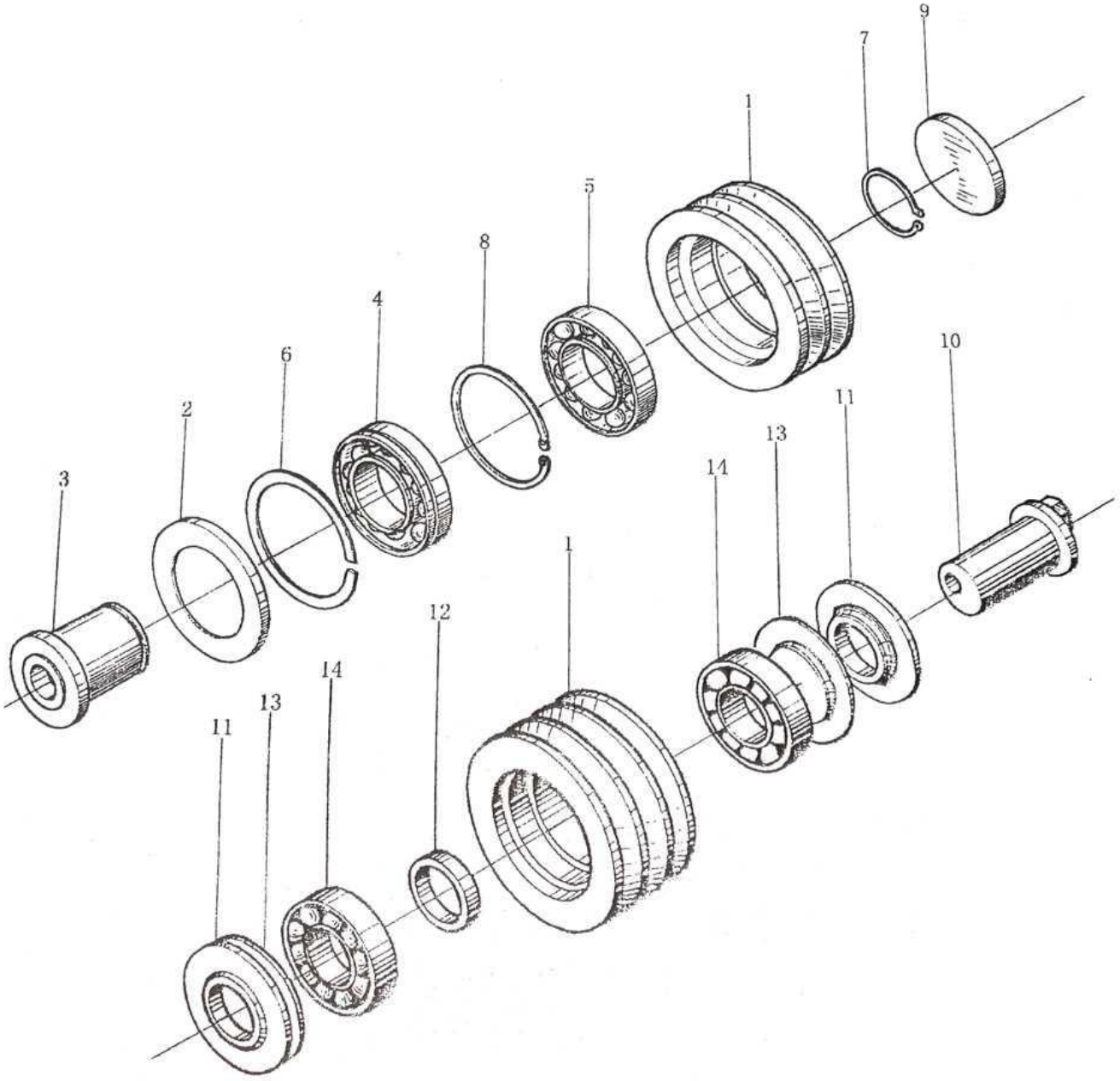

TENSIONING WHEEL, WD615-II			
Serial	Number	Name	Quantity
10	61560060070	tensioning wheel	1
11	61560060071	pin	1
12	61560060072	cap	1
13	61560060073	spacer bush	1
14	61560060074	guard ring	1
15	90093310067	radial ball bearing	1

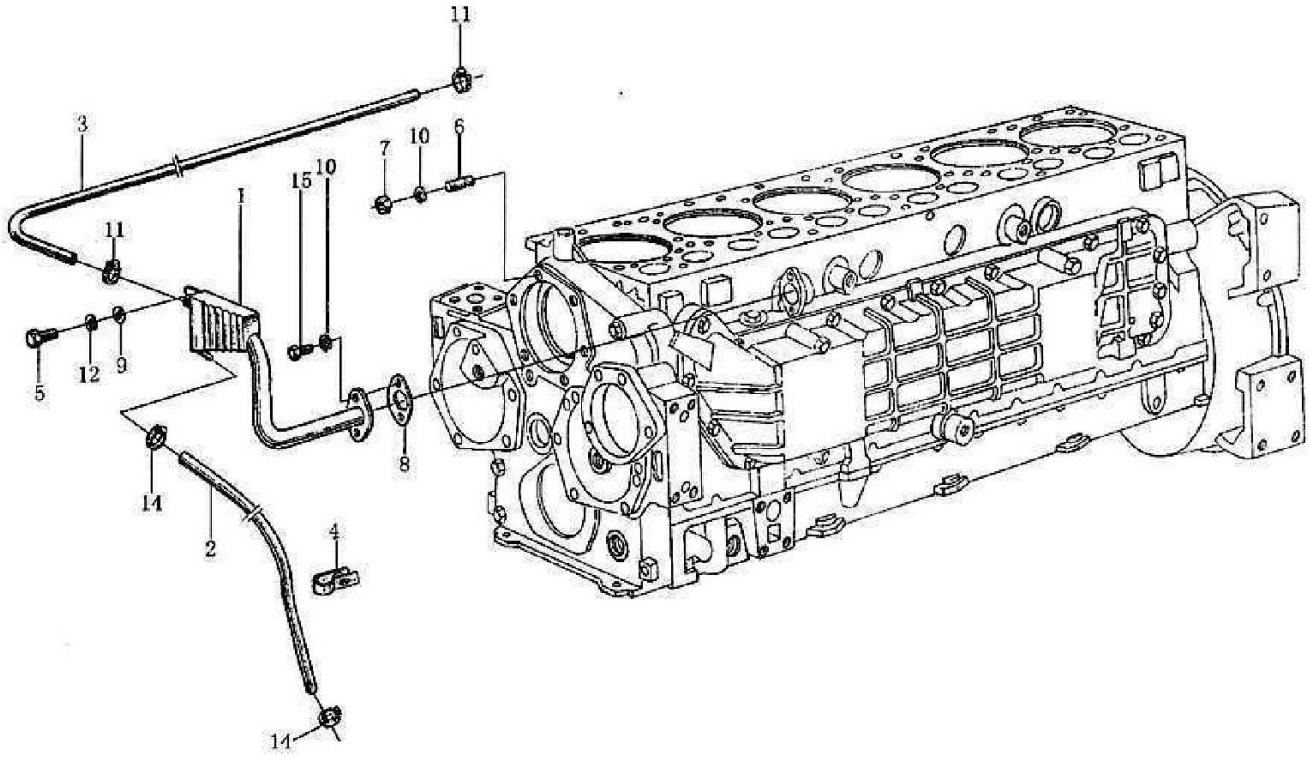

OIL-WATER SEPARATOR, WD615-II			
Serial	Number	Name	Quantity
1	612600010267	oil water separator compenent	1
2	61500010174	rubber tube	1
3	612G00040038	rubber tube	1
4	609E110049	fixed plate	1
5	90003802321	hexagon head bolt	1
6	90003813447	double head bolt	1
06a	90003813470	double head bolt	2
06b	90003813429	double head bolt	3
7	90003871252	hexagon nut	6
8	90003069303	gasket	1
9	90003936101	big gasket	1
10	90003932023	elastic gasket	8
11	90003989336	clamp for soft pipe	2
12	90003931082	spring gasket	1
13	90003179784	nylon pipe	1
14	90003989336	clamp for soft pipe	2
15	90003862427	colume head-hexagon inside screw	2

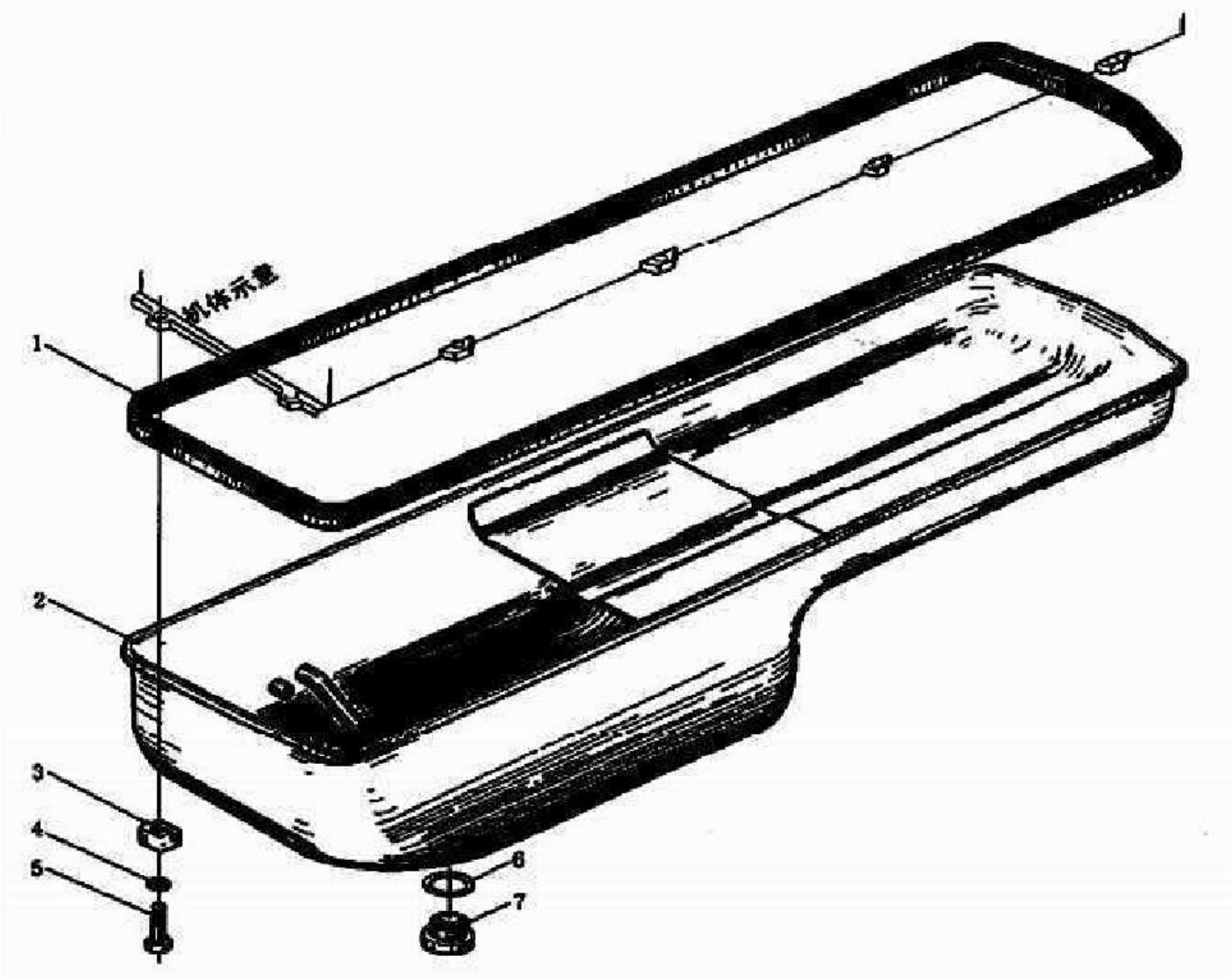

OIL PAN, WD615-II			
Serial	Number	Name	Quantity
1	614150004	sealing pad	1
2	61200150104	oil pan assembly	1
2	61800150015	oil pan assembly	1
3	614150046	support for oil pan	12
4	90003930261	flat washer	12
5	90003802442	hexagon bolt	12
6	612600150106	sealing gasket	1
7	612600150108	plug screw	1

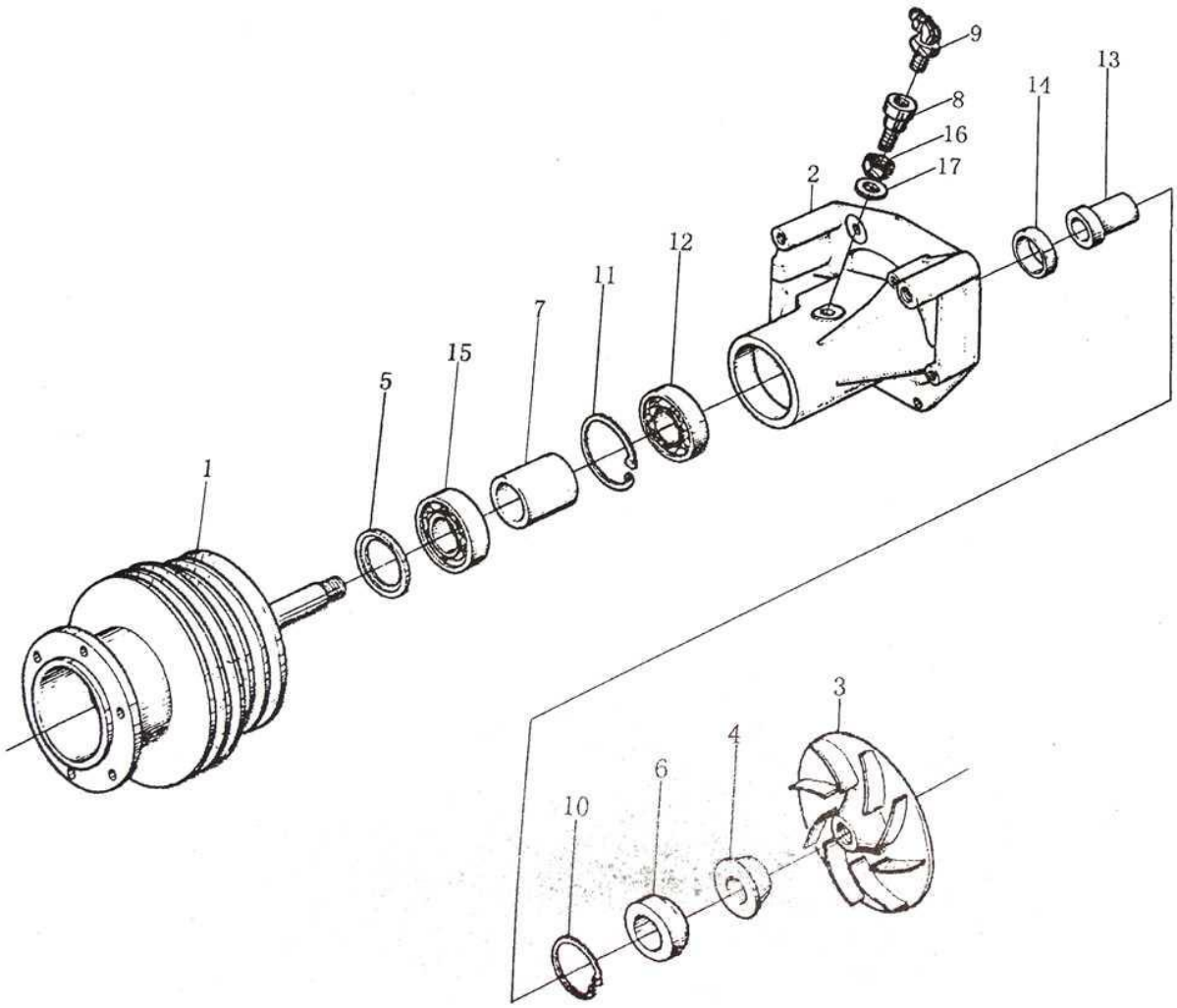

WATER PUMP, WD615-II			
Serial	Number	Name	Quantity
1	61500060124	bell wheel	1
2	61500060234	pump body	1
3	61500060249	impeller of pump	1
6	61200062034	sealing	1
7	61500060251	support sleeve	1
8	612600060192	grease cup	1
10	90003934311	elascit retainer ring	1
11	90003311179	radial ball bearing	1
12	90003320110	roller bearing	1
13	61500060248	shaft	1

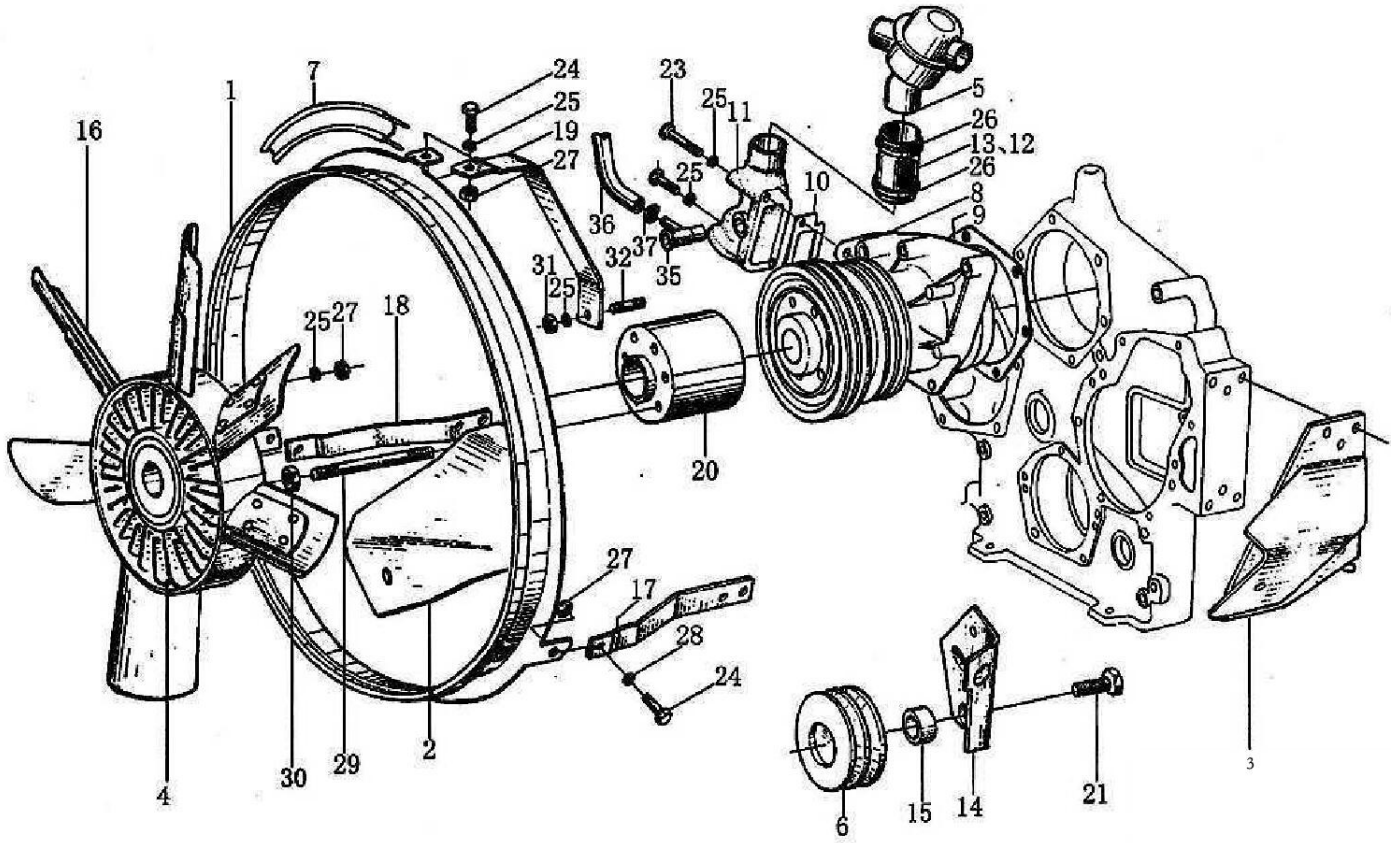

WATER PUMP & VENTILATOR, WD615-II			
Serial	Number	Name	Quantity
1	61560060004	fan cowl	1
2	99100590006	left support	1
3	99100590009	right support	1
4	61500060226	silicone oil clutch fan	1
5	614060135	thermostat	1
5	61500060116	thermostat	1
6	61560060069	tenshioning wheel	1
7	AZ1560060016	belt	1
8	61500060229	water pump	1
8	VG1500060050	water pump	1
8	612600060189	water pump	1
8	VG61500060154	water pump	1
9	614060008	sealing gasket for water pump	1
10	614060024	gasket for water pipe joint	1
11	61560060022A	water pipe joint	1
12	61000060262	rubber pipe	1
13	61000060276	rubber pipe	1
14	61560060021	supporting pad for tenshioning wheel	1

15	614060160	spacer bush	1
16	61500060131	fan	1
17	61560060010	support	1
18	61560060011	support	1
19	61560060012	support	1
20	61500060239	flange in middle	1
21	90003802672	hexagon head bolt	1
23	90003800467	hexagon head bolt	1
24	90003802424	hexagon head bolt	8
25	90003932023	elastic gasket	12
26	90003989306	clamp for soft pipe	4
27	90003888451	nut	11
28	90003937283	gasket	3
28a	90003930261	gasket	9
29	90003810020	double head bolt	6
30	90003888452	nut	6
31	90003871252	hexagon head nut	1
32	90003811420	double head bolt	1
35	AZ1560060001	components for pipe joint	1
36	612600130025	rubber pipe	1
37	90003989336	clamp for soft pipe	2

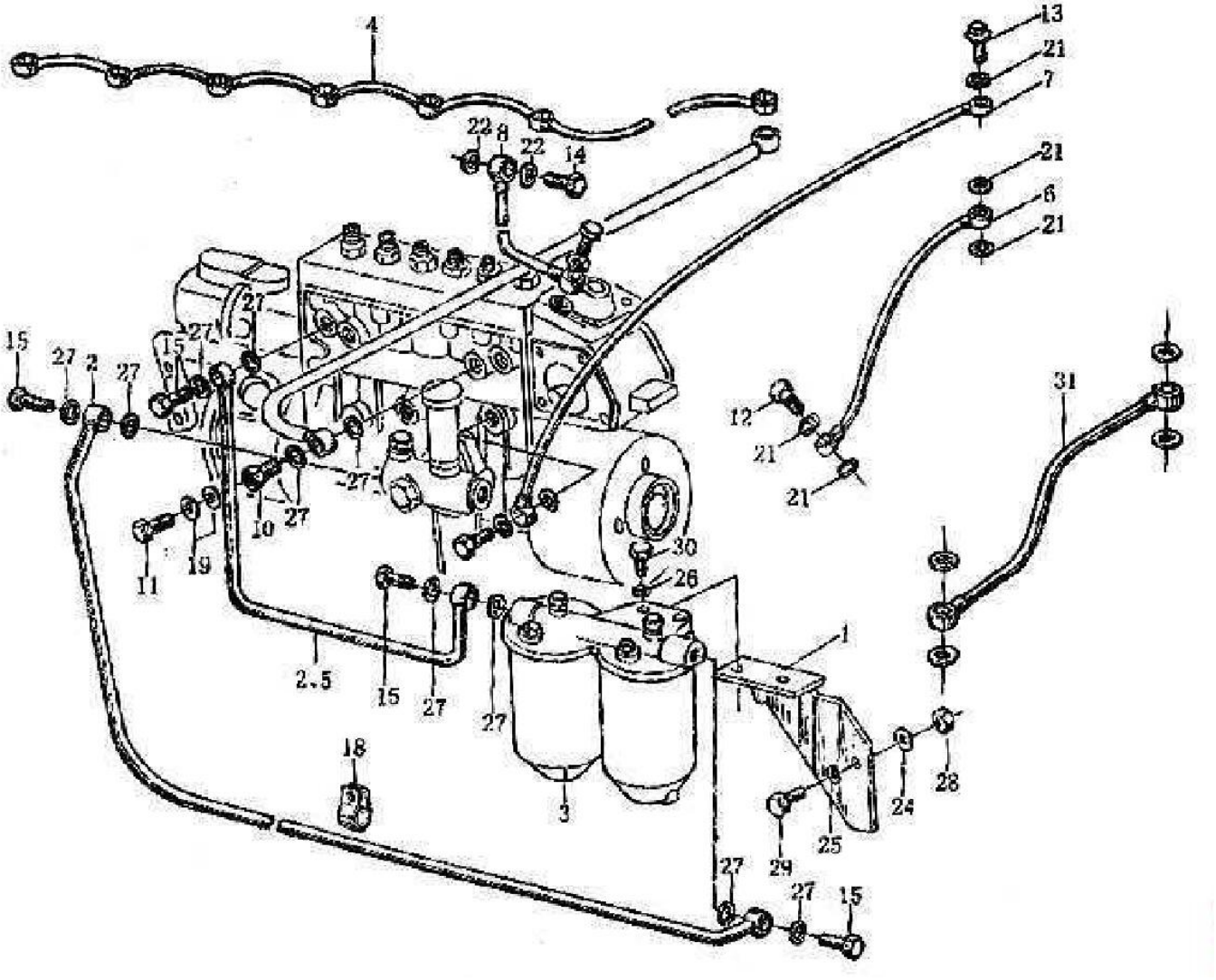

FUEL PIPE, WD615-II			
Serial	Number	Name	Quantity
1	61560080094	components of support for fuel filter	1
2	AZ1560080017	fuel pipe	1
3	614080295A	fuel filter	1
3	WG9112550002	fuel filter	1
3	614080740	fuel filter	1
3	614080739	subtle filter	1
4	61500080095	fuel return pipe	1
5	AZ1560080018	fuel pipe	1
6	61560070011	oil input pipe	1
7	61560070012	oil input pipe	1
8	61560080159	air pipe	1
10	6090837	hollow bolt	1
11	90003962603	hollow bolt	1

12	90003962607	hollow bolt	2
13	81500070054	hollow bolt	1
14	90003962612	hollow bolt	2
15	90003962621	hollow bolt	4
19	90003098008	sealing gasket	2
21	90003098010	sealing gasket	7
22	90003098012	sealing gasket	4
24	90003930012	gasket	2
25	90003932024	elactic gasket	2
26	90003932016	elactic gasket	2
27	612600080200	sealing gasket	10
28	90003888452	hexagon tenshioning nut	2
29	90003802523	hexagon head bolt	2
29	90003802527	hexagon head bolt	2
30	90003802627	hexagon head bolt	2

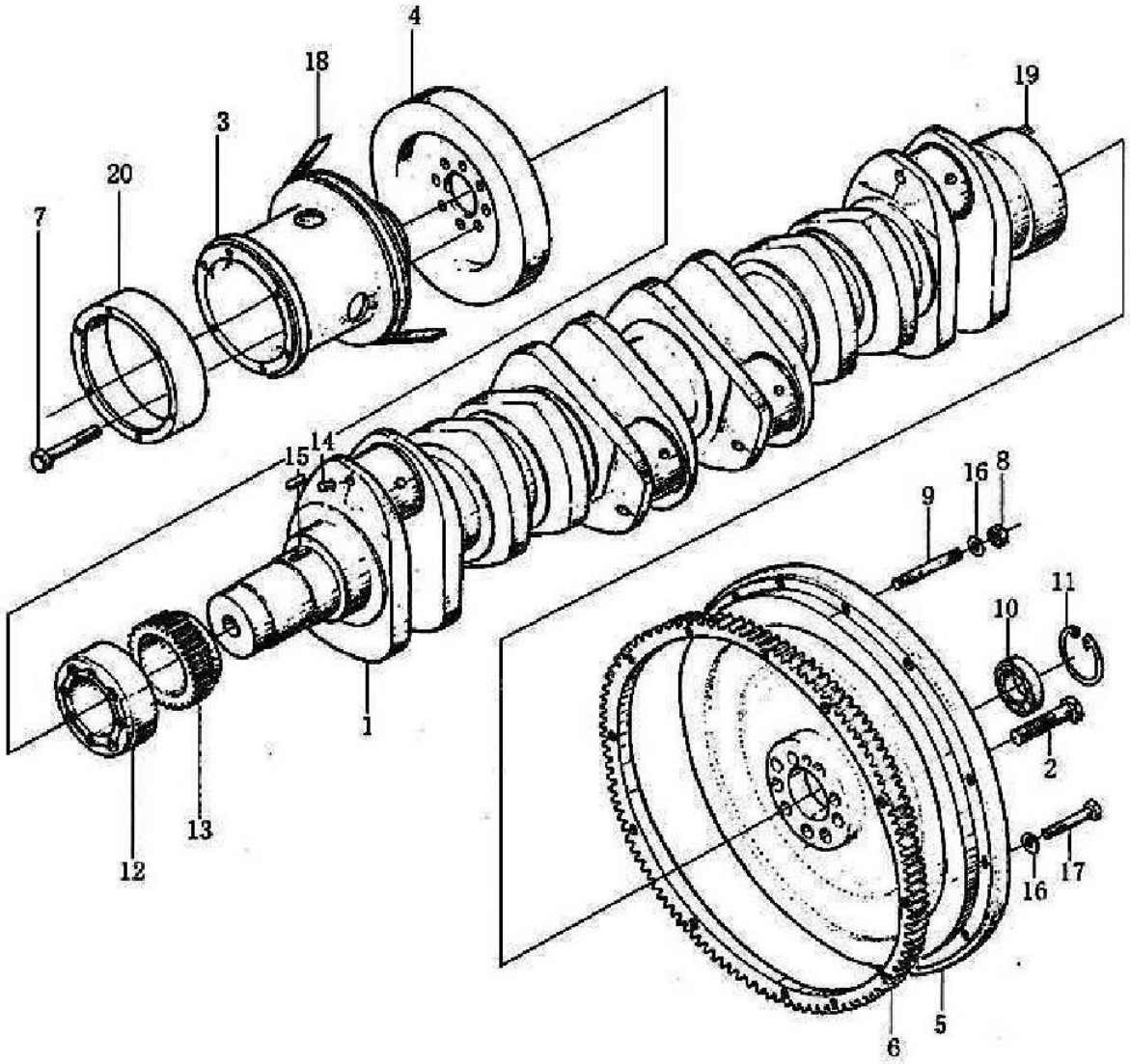

CRANKSHAFT & FLYWHEEL, WD615-II			
Serial	Number	Name	Quantity
1	61500020071	crankshaft	1
1	61560020029	crankshaft	1
1	61500020012	crankshaft	1
1	61560020024	crankshaft	1
2	61500020046	hexagon head bolt	9
3	61560020017	belt wheel	1
3	61560020016	belt wheel	1
4	61560020010	suspension	1
5	61560020041	flywheel	1
6	81400020015	gear ring for flywheel	1
7	90003802558	hexagon head bolt	8
8	90003871305	hexagon head nut	2

9	90003813571	double head bolt	2
10	90003311416	radial ball bearing	1
11	90003934310	elastic retainer ring	1
12	61500020070	flange	1
13	614 020038	wheel gear of crankshaft	1
14	90003961504	pin	6
15	90003960569	flat key	1
16	90003932024	elastic gasket	12
17	90003800579	hexagon head bolt	10
18	81500060228	triangle belt for water pump	2
19	90003901418	pin	1

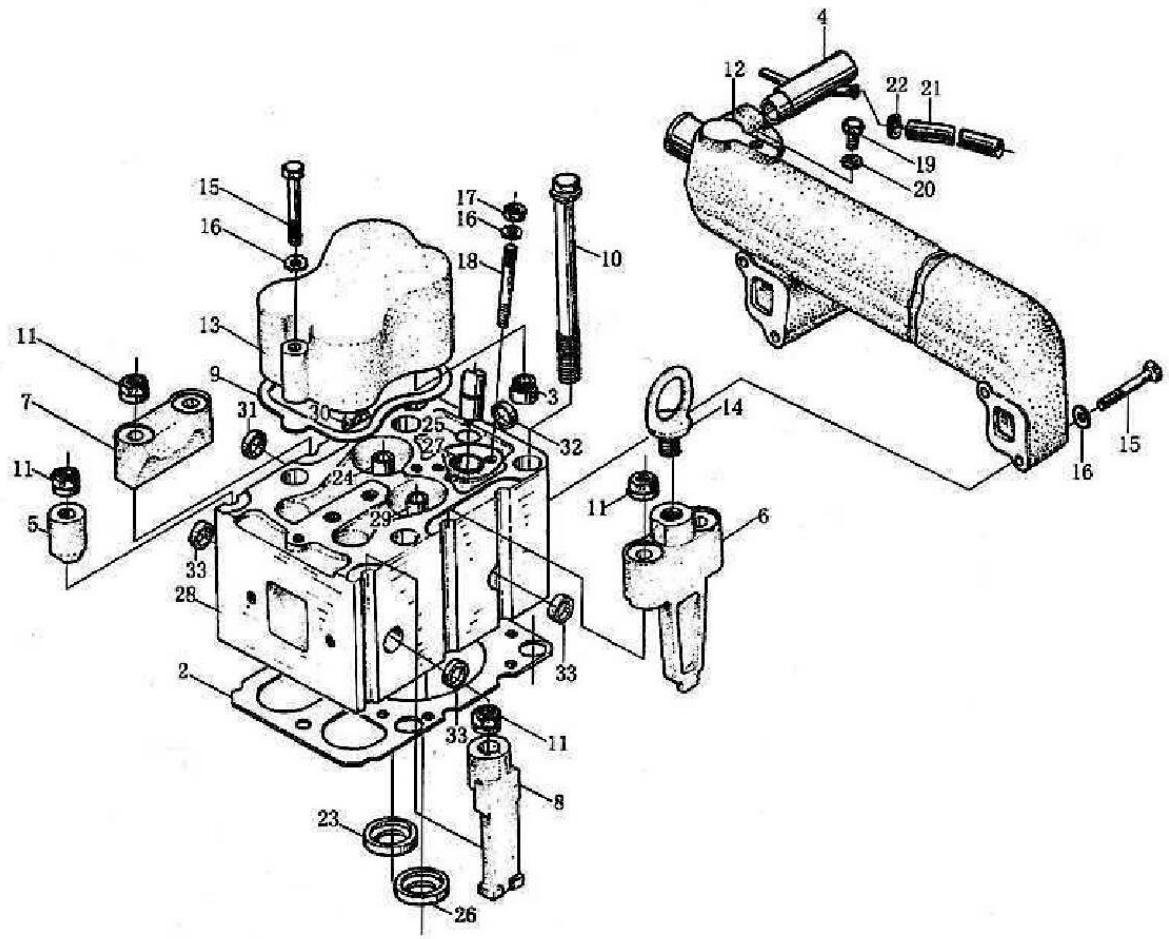

CYLINDER HEAD, WD615-II			
Serial	Number	Name	Quantity
1	61500040058	branching cylinder head assy	6
2	61500040049	pad of cylinder head	6
3	61560040032	seal cover for valve rod	12
4	61500060045	components for pipe joints	1
5	61200040023	clamp	5
6	61500040012	clamp	2
7	61500040009	clamp	5
8	61200040027	clamp	2
9	61560040039	pad of cylinder head cover	6
10	61500040023	bolt for cylinder head	24
11	61200040034	nut	21
12	61500040102	water discharging tube	1
13	614 040065	cylinder head cover	6
14	614 010388	screw	2
15	90003800466	hexagon head bolt	24
16	90003932023	elastic gasket	24

17	90003871252	hexagon head nut	12
18	90003813471	double head bolt	12
23	61560040057	air intake seat	6
24	61560040051	air valve guide pipe	12
25	406 060010	seal	6
26	81560040037	air exhaust seat	6
27	61560040049	bushing for fuel injector	6
28	61500040040	cylinder head	6
29	61500040014	air exhaust spring seat	6
30	90003989277	plug	6
31	90003989721	plug	6
32	90003989725	plug	6
33	90003989294	plug	24

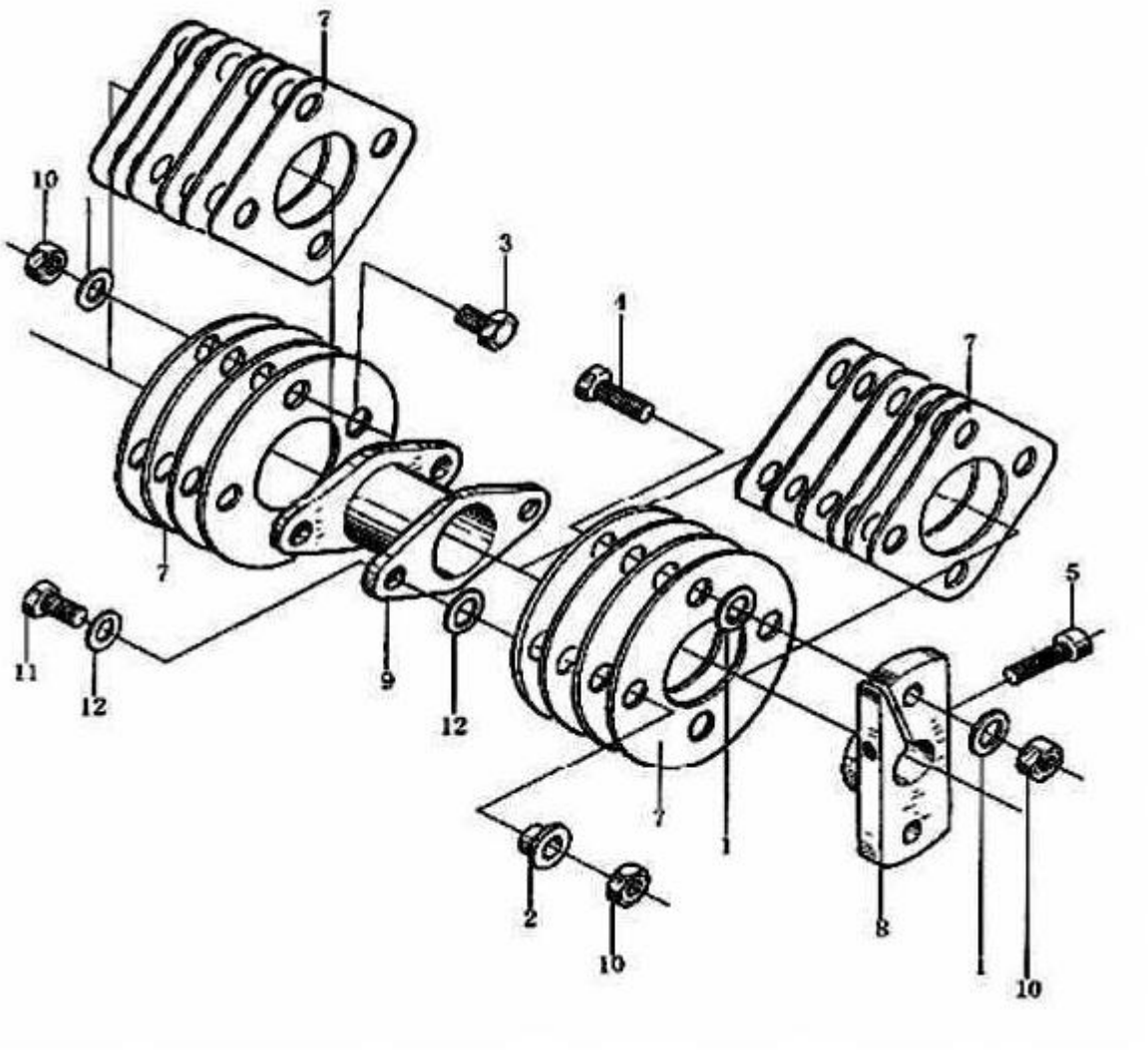

COUPLER, WD615-II			
Serial	Number	Name	Quantity
1	81560080271	gasket	8
2	81560080273	bushing	8
3	90003802637	hexagon head bolt	4
3	90003802639	hexagon head bolt	2
4	90003800160	hexagon head bolt	2
5	AZ1560080001	hexagon head bolt	1
7	61560080219	elastic connecting plate	12
8	61560080194	angle adjusting plate	1
9	61560080275	flange component	1
10	90003871344	hexagon head nut	8
12	90003930282	flat gasket	8

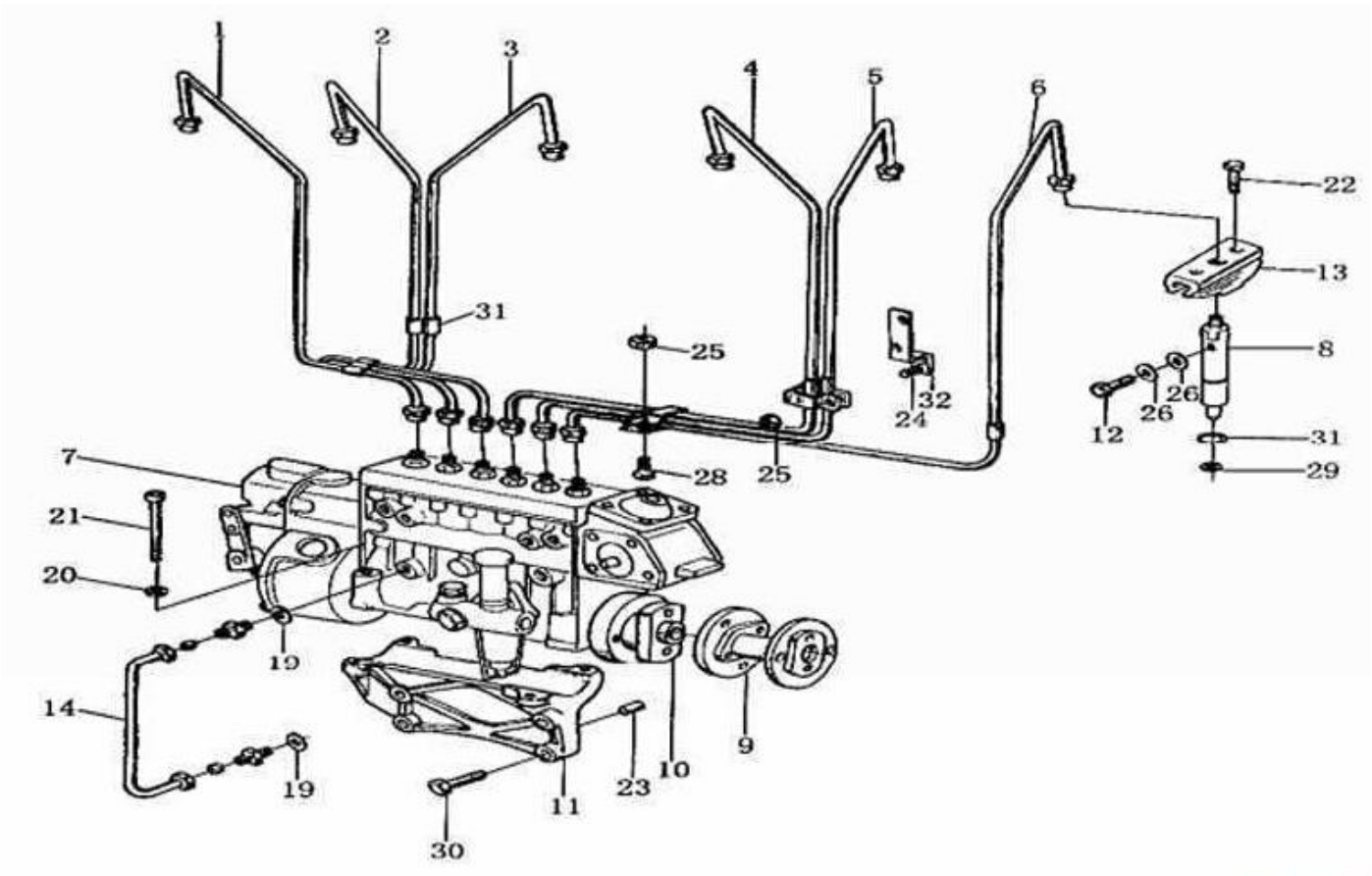

INJECTOR & FUEL PIPE, WD615-II			
Serial	Number	Name	Quantity
1	61560080278	high pressure fuel pipe set	1
1	61560080278—1	first cylinder fuel pipe assy	1
2	61560080278—2	second cylinder fuel pipe assy	1
3	61560080278—3	third cylinder fuel pipe assy	1
4	61560080278—4	forth cylinder fuel pipe assy	1
5	61560080278—5	fifth cylinder fuel pipe assy	1
6	61560080278—6	sixth cylinder fuel pipe assy	1
7	61560080302	speed controller	1
7	612600082115	speed controller	1
7	612600081075	fuel pump	1
7	612600083075	fuel pump	1
7	612600087075	fuel pump	1
7	612600081082	fuel pump	1
7-1	614080719	fuel transfer pump	1
8	61560080276	injector assy	6
8	61560080305	injector assy	6
8-1	61560080276-1	fuel spray nozzle	6

8-1	61560080305-1	fuel spray nozzle	6
9	61560080275	flange components	1
10	61560080261	flange	1
11	614080074B	support for fuel pump	1
12	61500080090	bolt	6
13	61500080094A	tighten clamp	6
14	AZ1560070026	oil return pipe	1
15	614080060	upper clip	2
16	614080061	down clip	2
17	61560080173	plate of clip	2
18	61560080174	plate of clip	2
19	90003098015	sealling gasket	12
20	90003930271	flat gasket	4
21	90003862566	column head bolt	4
22	90003802455	hexagon bolt	12
23	90003901600	column pin	2
24	90003802321	hexagon bolt	4
25	90003871232	hexagon nut	6
26	90003098018	sealing gasket	12
27	90003559844	connector of pipe	2
28	90003802312	hexagon bolt	2
29	614080082	gasket	6
30	90003802650	hexagon bolt	4
31	609070080	sealing gasket	6
32	61560080172	support	4
33	612600080213	single direction valve	1

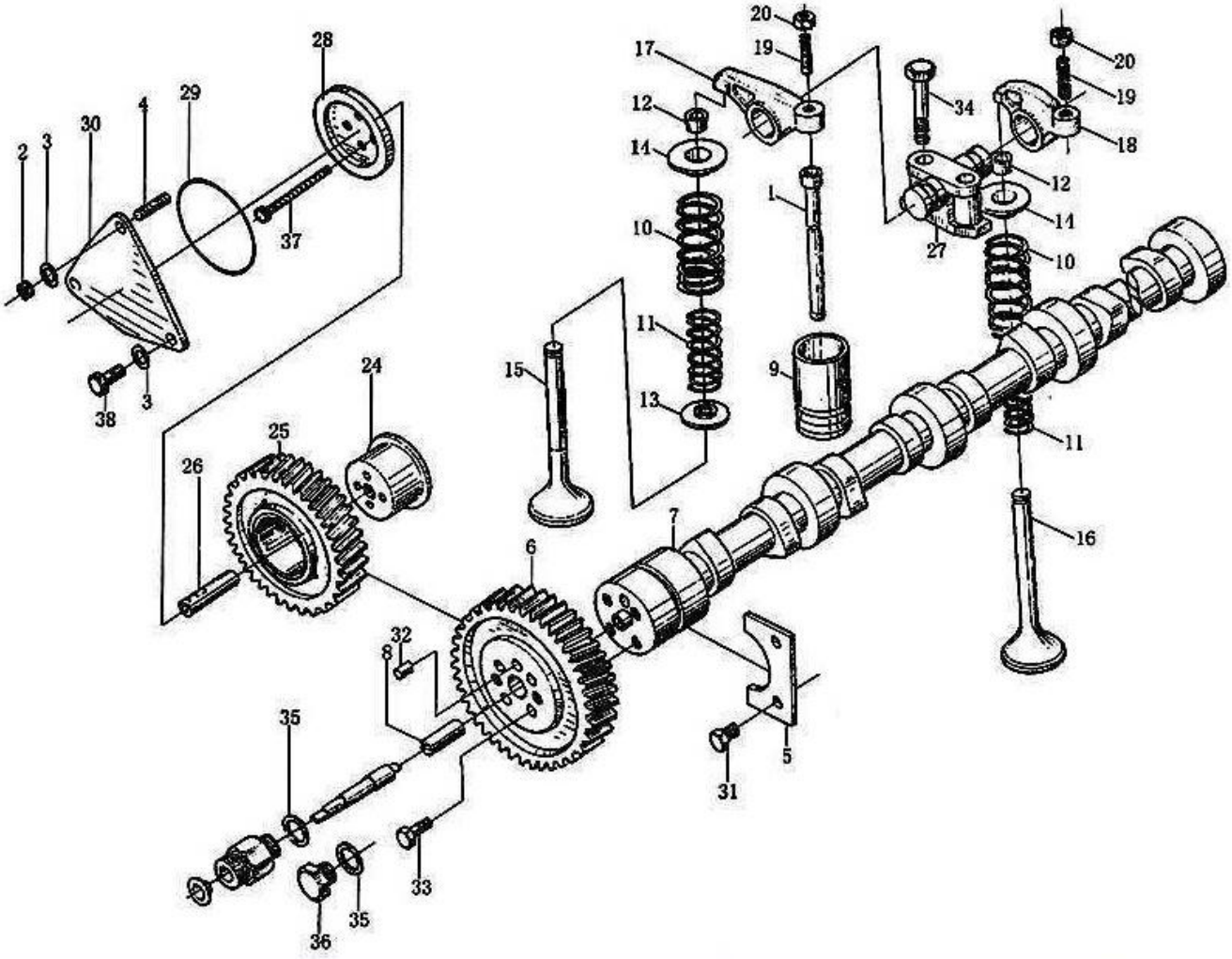

VALVE MECHANISM, WD615-II			
Serial	Number	Name	Quantity
1	614 050058C	air valve rod	12
1	81500050070	air valve rod	12
2	90003871252	hexagon nut	2
3	90003932023	elastic gasket	3
4	90003813414	double head bolt	2
04a	90003862419	hexagon screw	1
5	614050133	thrust washer for camshaft	1
6	614050053	timegear	1
7	61560050004	camshaft	1
7	61500050096	camshaft	1
8	614050079	driving pin	1
8	90003901409	column pin	1

9	61500050032	valve lifter	12
11	61500050001	inner spring for air valve	12
12	81500050021	valve clip	24
12	61500050025	valve clip	
13	614050017	down seat for air input valve spring	6
14	61500050109	seat for air input valve spring	12
15	61460050007	air inlet valve	6
15	61560050042	air inlet valve	
16	61560050041	exhaust valve	6
17	614050048	inlet rocker	6
18	614050049	exhaust rocker	6
19	614050010	gap adjustment screw	12
10	61500050002	outer spring for air valve	12
20	2130050065	gap adjustment nut	12
24	61560050044	intermediate gear shaft	1
25	61560050053	intermediate gear	1
26	61560050058	shaft	1
27	614050119	air valve rod seat	6
28	61560050045	guard	1
29	90003120602	sealing ring	1
30	61560050046A	cover plate	1
31	90003802411	hexagon bolt	2
32	90003901409	column pin	1
33	90003802443	hexagon bolt	4
34	90003802655	hexagon bolt	12
37	61560050059	hexagon bolt	4
38	61500050105	valve gap	12
39	90003862419	column head hexagon bolt	1

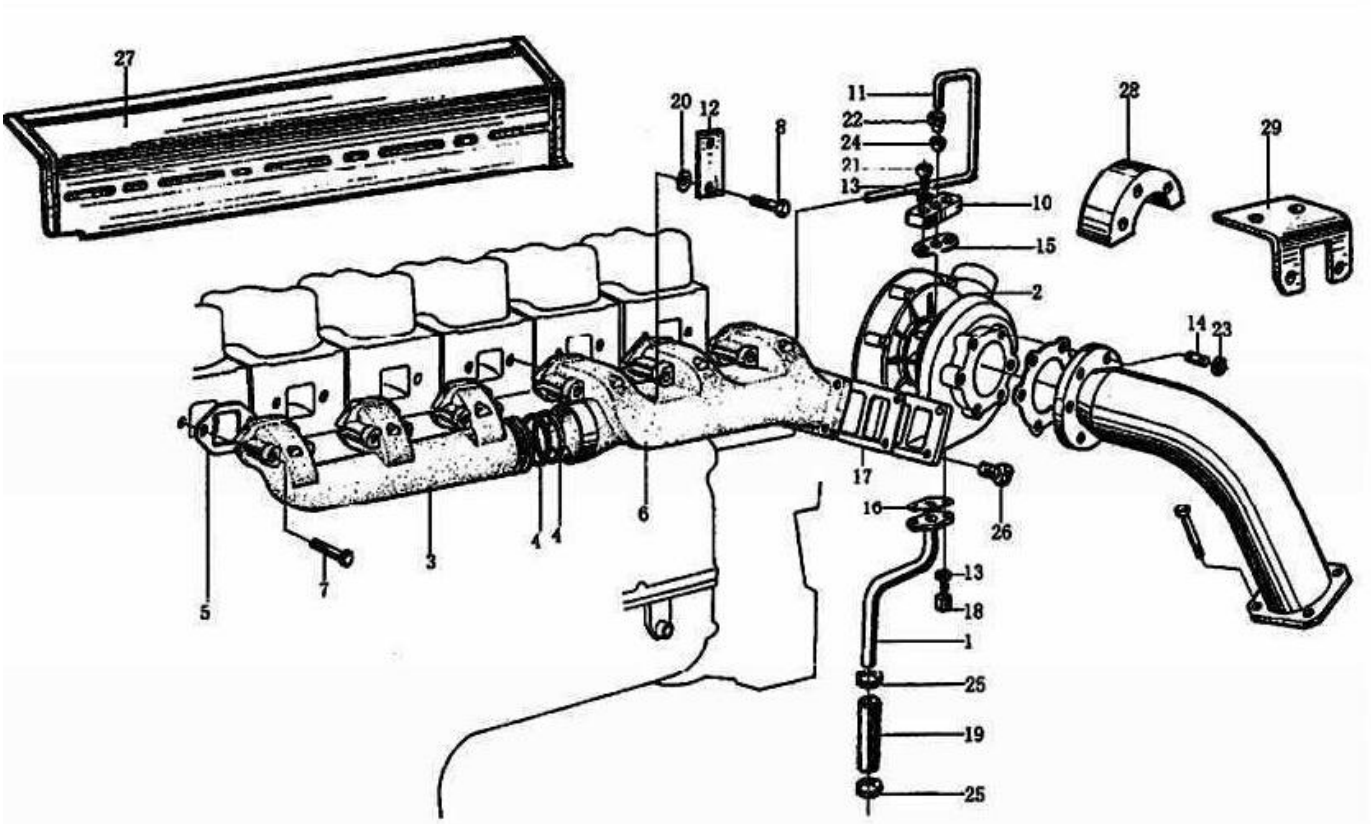

AIR EXHAUST PIPE, WD615-II			
Serial	Number	Name	Quantity
	612600106730290	sub-pipe for rear exhaust（0673）	1
1	612600110361	fuel return pipe	1
2	612600113227	turbo charger	1
2	VG2600118899	turbo charger	1
2-1	VG1500119216	clip for turbo charger	1
3	61560110120	front divided manifold	1
4	61260110162	sealing ring for exhaust pipe	4
5	61560110111	gasket for exhaust pipe	6
6	61560110222	rear divided manifold	1
7	61560110104	tightening bolt	11
8	61560110105	tightening bolt	1
10	81560110152	fuel inlet flange	1
11	61560070001	fuel inlet pipe	1
12	99974200	supporting plate	1
13	188250083	self-locking gasket	4
14	81560110187	double head bolt	6
15	609E110050	pad for fuel inlet pipe	1

16	61260110048	pad for fuel return flange	1
17	61560110210	pad for turbo charger	1
18	61460070014	bolt for fuel return pipe	2
19	612600070071	soft pipe for turbo charger oil returen	1
20	609070067	thrust ring	1
21	90003862428	screw	2
22	90003559513	nut	2
23	90003888470	nut	6
24	90003559563	clamp	2
25	90003989340	clamp	2
25	VG1500119215	clip	2
25	VG1500119216	clip	2
26	61560110241	bolt	4

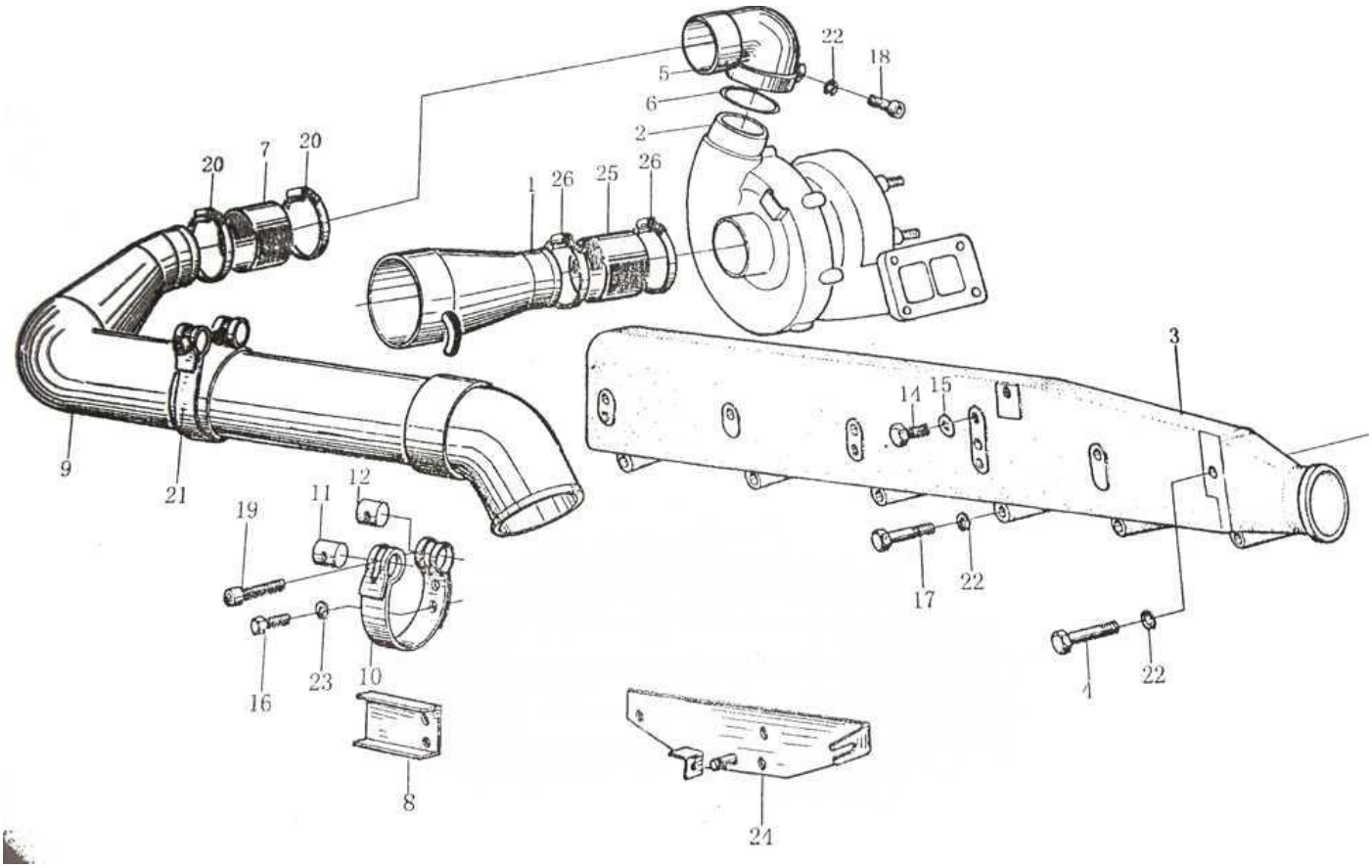

AIR INLET PIPE, WD615-II			
Serial	Number	Name	Quantity
1	612600110505	components for air compressor	1
2	615600116227	turbo charger	1
3	61560110131	air inlet pipe assy	1
4	614110064	bolt for air inlet pipe	4
04a	90003800497	hexagon bolt	2
5	61560110165	connecting pipe	
6	190320035	sealing ring	1
06a	61560110226	clip	1
7	612600110824	rubber pipe	1
8	61560110072	butt strap	
9	61560110051	pipe assy	1
10	61560110021	band of clamp	2
11	209190017	tightening pin	2
12	1700550013	tenshioning pin	2
13	61500110024	pad for air inlet pipe	6
14	90003962014	plug screw	1
15	90003098010	sealing gasket	1

16	90003802415	hexagon bolt	1
16a	90003802411	hexagon bolt	1
17	90003800465	hexagon bolt	6
18	90003862443	hexagon bolt	2
19	90003862462	hexagon bolt	1
20	90003989312	clamp for soft pipe	2
21	90003862456	screw	1
22	90003932023	elastic pad	20
23	609E110036	adjusting pad	3
24	99100570015	cantilever assy	1
25	81560110220	rubber pipe	1
26	90003989312	clamp for soft pipe	2
26a	90003989318	clamp for soft pipe	2