SINOTRUK

WD615, EURO II ENGINE SPARE PARTS CATALOG

Part -II

INDEX

OIL PUMP AND FILTER	Page 3
OIL PUMP AND FILTER 2	Page 4
FLAME STARTING SYSTEM	Page 6
ELECTRICAL IMPLEMENT	Page 8
AIR COMPRESSOR	Page 9
GEAR CASE & FLYWHEEL HOUSING	Page 11
FILLING PIPE	Page 13
PISTON & CONNECTING ROD	Page 15

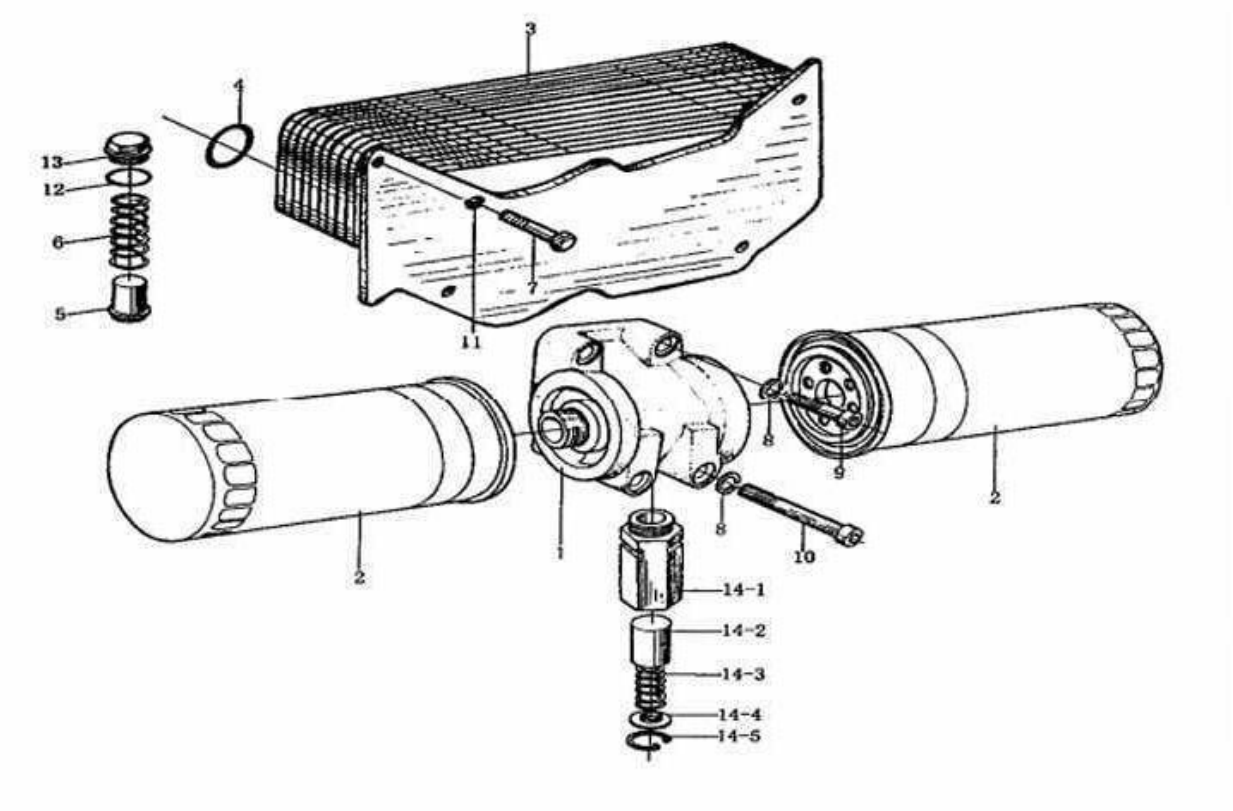

OIL PUMP AND FILTER, WD615-II			
Serial	Number	Name	Quantity
1	61500070051	components for filter seats	1
2	61000070005	oil filter assy	2
3	61500010334	oil cooling core assy	1
4	81400010032	sealing ring	2
5	614 070069	safety valve	1
6	614 070068	spring for safety valve	1
7	903802455	hexagon bolt	8
8	90003932023	elastic gasket	4
9	90003862443	inner hexagon screw	2
10	90003862482	inner hexagon screw	2
11	90003430261	gasket	8
12	90003098086	sealing ring	1
13	90003962051	hexagon plug screw	1
14	AZ1500070097	pressure limiting valve	1
14-1	AZ1500070096	valve body	1
14-2	407 070032	valve	1
14-3	407 070034	spring seat for pressure limiting valve	1
14-4	4139070059	spring for pressure limiting valve	1
14-5	AZ90003930012	elastic retaining ring	1

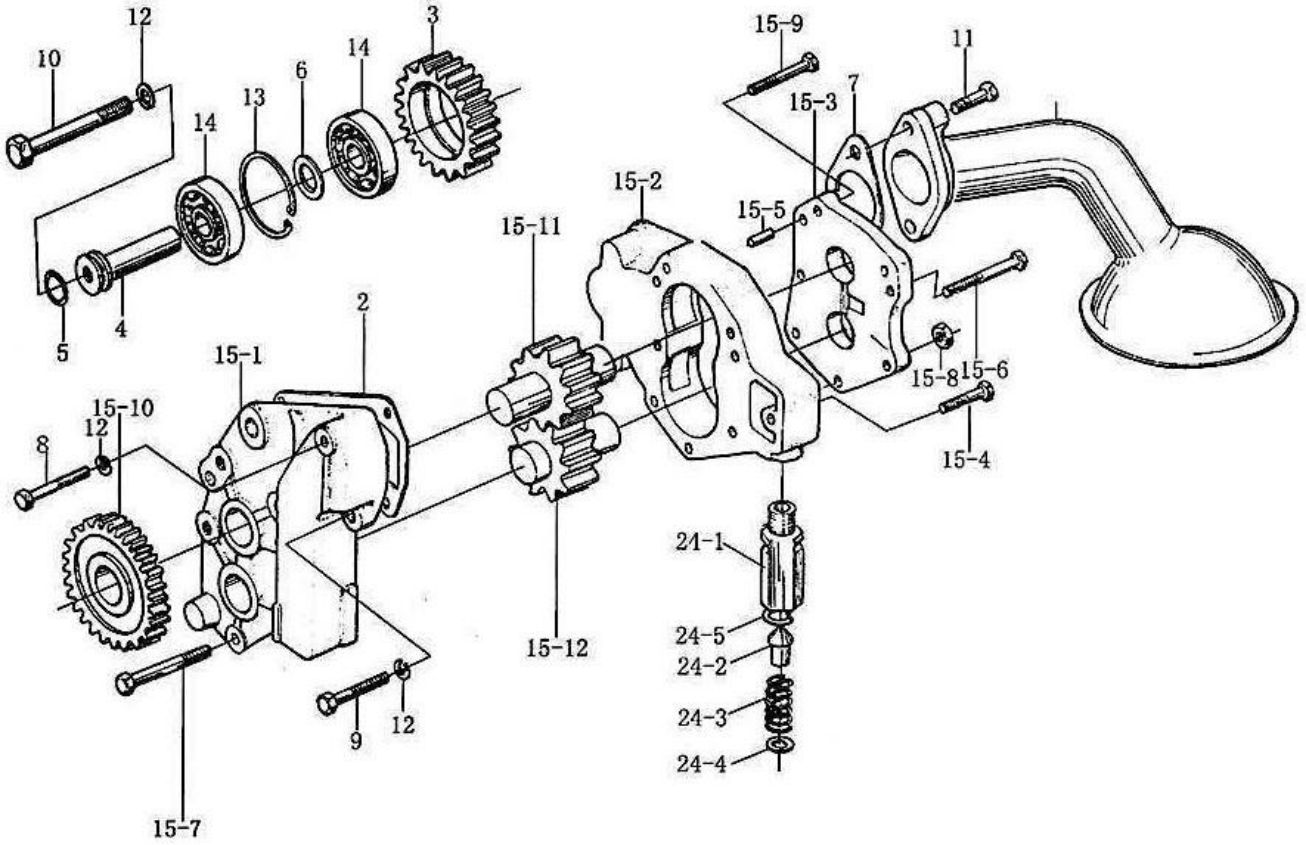

OIL PUMP AND FILTER 2, WD615-II			
Serial	Number	Name	Quantity
1	61500070082	collector	1
2	614070055	pad for oil pump	1
3	614070061	intermediate gear for oil pump	1
4	6140756	intermediate gear shaft	1
5	614070155	sealing ring	1
6	6140749	set collar	1
7	6140778	pad	1
8	90003800551	hexagon bolt	1
9	90003802527	hexagon bolt	1
10	90003802578	hexagon bolt	1
11	90003802523	hexagon bolt	2
12	90003931122	spring gasket	2
13	90003934732	retaining ring	1
14	90003311410	radial ball bearing	2
15	AZ1500070021	oil pump	1
15-1	61500070029	oil pump front cap	1

15-10	614 070060	driving gear for oil pump	1
15-2	AZ1500070015	shell body for oil pump	1
15-3	61500070024	rear cap for oil pump	1
15-4	90003800441	hexagon bolt	1
15-5	90003901420	column pin	1
15-6	90003800458	hexagon bolt	1
15-7	90003800465	hexagon bolt	1
15-8	90003871252	hexagon nut	1
15-9	AZ90003860010	inner hexagon screw	1
15-11	AZ1500070019	gear assy for oil pump	1
15-12	AZ1500070020	gear assy for oil pump	1
24	61500070099	pressure limiting valve for oil pump	1
24-1	61500070098	pressure limiting valve body	1
24-2	614070130	pressure limiting valve	1
24-3	614070131	spring	1
24-4	681270027	pad	1
24-5	AZ9003930011	retaining ring	1

WD615 FLAME STARTTING SYSTEM/火焰预热起动系统

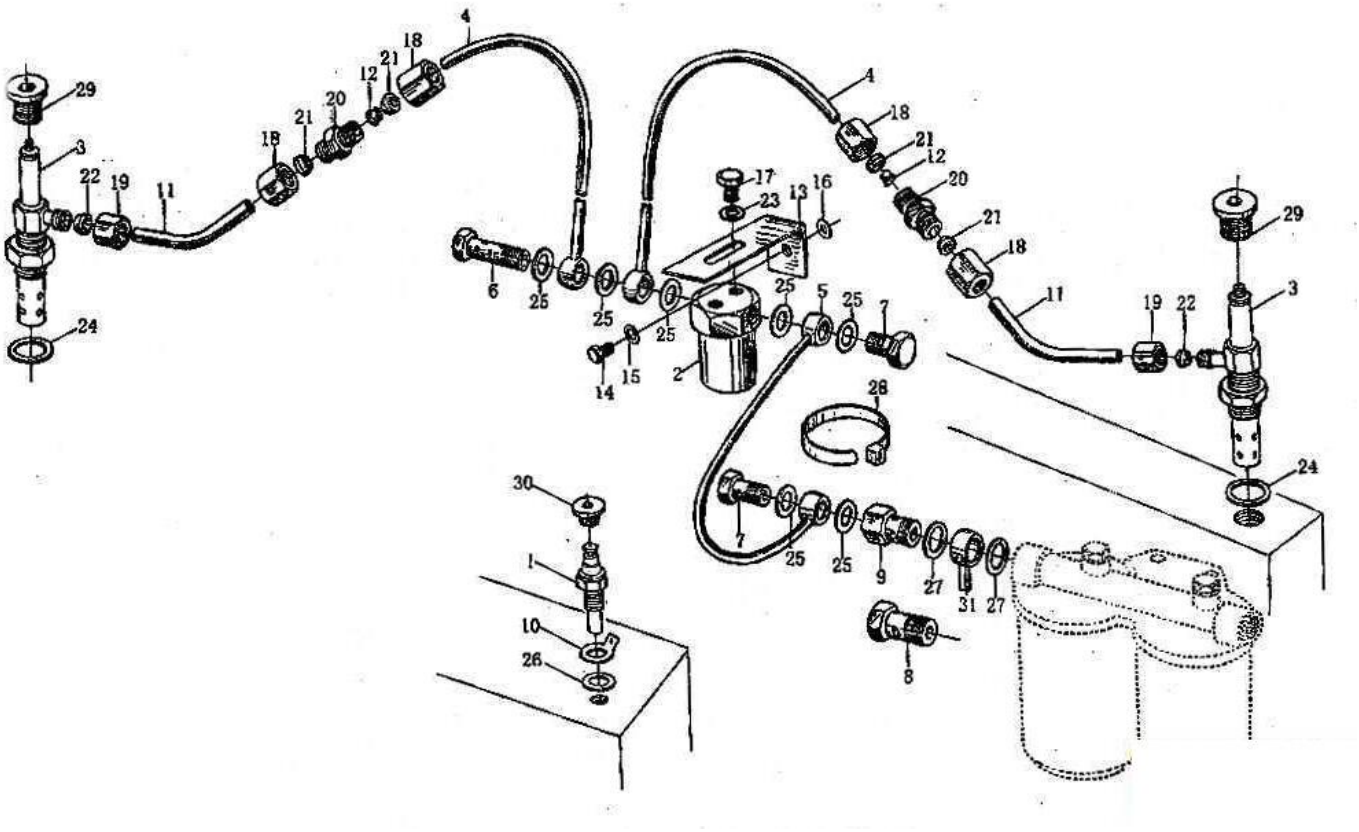

FLAME STARTING SYSTEM, WD615-II			
Serial	Number	Name	Quantity
1	AZ1500090132	temperature sensor	1
2	61200090163	magnetic valve	1
3	61200090162	flame starting plug	1
4	61560080154	fuel pipe	2
5	61200080159	fuel pipe	1
6	81560080212	hollow bolt	1
7	9000362607	hollow bolt	2
8	90003962621	hollow bolt	1
9	609E110070	connecting bolt	1
10	79000770116	flat plug	1
11	81560080327	pipe	2
12	99014280016	bushing	2
13	99012360441	angle type support	1
14	90003802415	hexagon bolt	1
15	90003932023	elastic pad	1

16	90003930261	flat pad	1
17	90003802307	hexagon bolt	2
18	90003559516	nut for pipe joint	4
19	90030559506	nut for connecting	2
20	90003559462	joint	2
21	90003559561	sleeve	4
22	90003559557	sleeve	2
23	90003931082	spring pad	2
24	90003098029	sealing pad	2
25	90003098010	sealing pad	7
26	90003098010	sealing pad	1
27	90003098015	sealing pad	2
28	90003171697	clipping band	4
29	90003960005	hexagon screw	2
30	90003962014	hexagon bolt	1
31	AZ1500080155	fuel pipe	1

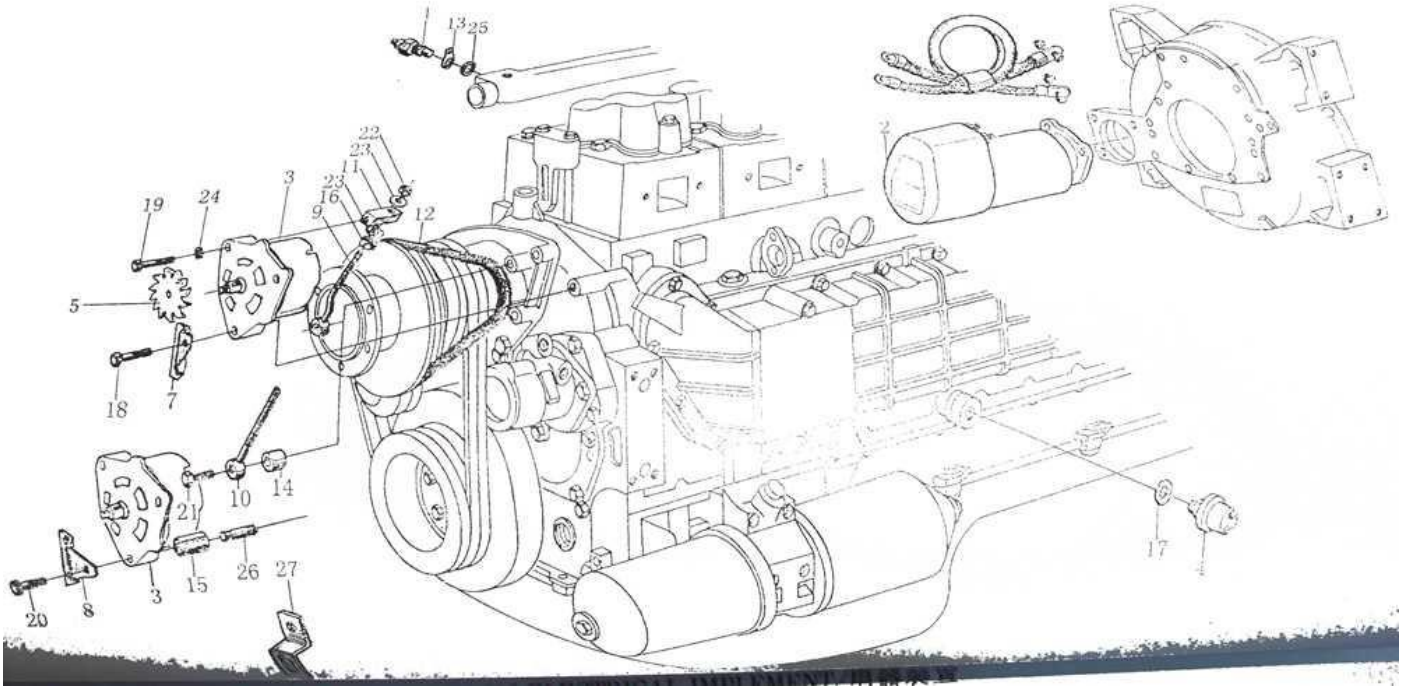

ELECTRICAL IMPLEMENT, WD615-II			
Serial	Number	Name	Quantity
1	614090067	sensor for water temperature	1
2	61500090029	starter	1
3	61200090043	generator	1
4	61500090051	pressure sense plug	1
5	61409O058	fan impeller	1
6	61500090004	belt wheel	1
7	61500090010	fixing plate	1
9	61500090018	tenshioning bolt	1
11	61500090011	tenshioning block	1
12	61500090065	triangle belt	2
13	614090050	binding post	1
16	90003888452	hexagon locking nut	1
17	160A. 13. 35	sealing pad	1
18	90003800571	hexagon bolt	1
19	90003800564	hexagon bolt	1
22	90003871305	hexagon bolt	1
23	90003935125	flat gasket	2
24	90003932025	elastic gasket	1
25	90003098014	sealing gasket	1

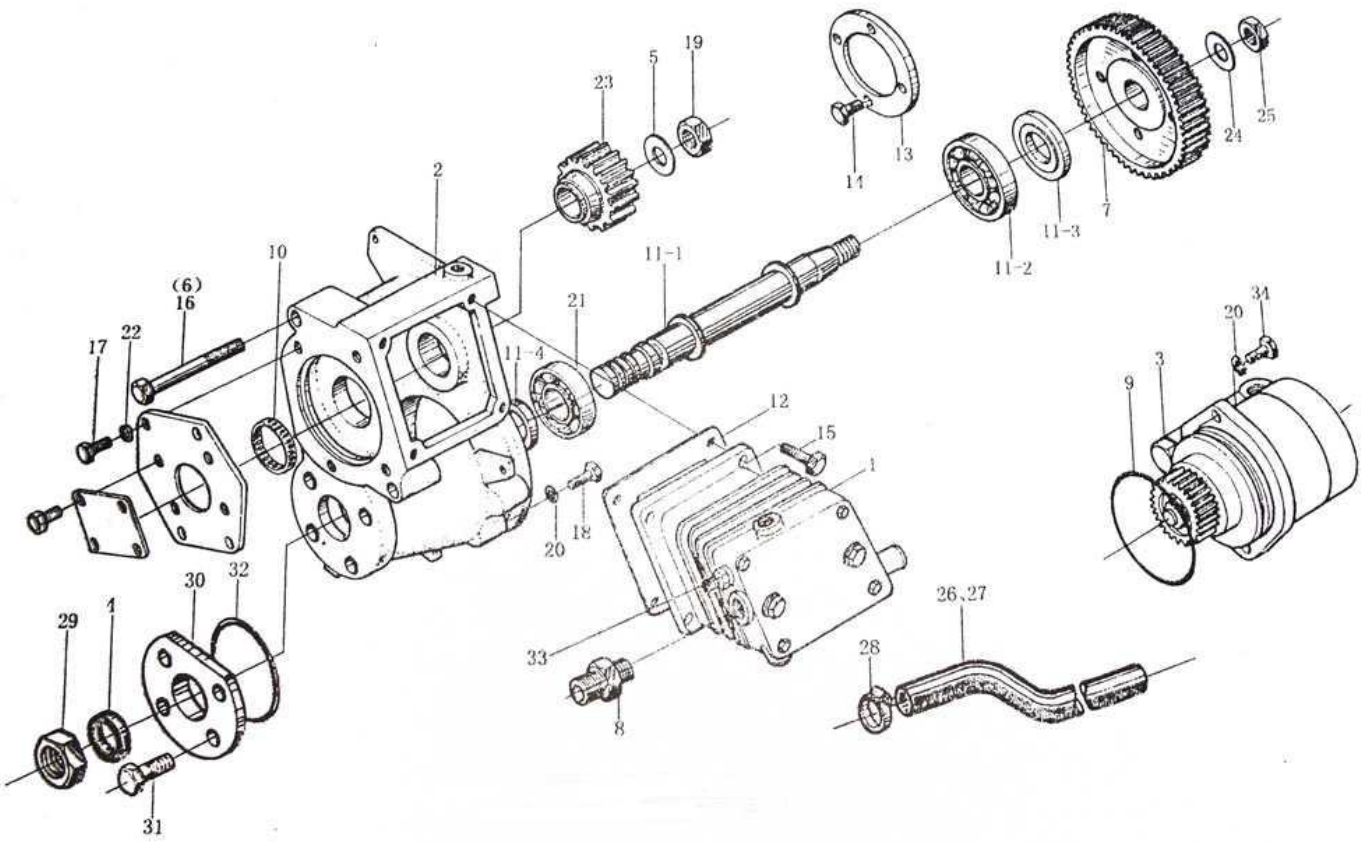

AIR COMPRESSOR, WD615-II			
Serial	Number	Name	Quantity
1	AZ1560130070	water cooling air compressor	1
2	AZ1560130063	crankshaft case for air compressor	1
4	90003070092	oil seal	1
5	609070161	supporting ring	1
6	90003802561	hexagon bolt	1
7	AZ1560130064	fuel pump gear	1
11	61500080167	transmission shaft assy	1
11-1	612600130048	transmission shaft	1
11-2	90003320154	rolling bearing	1
11-3	61500080158	bearing	2
11-4	612600130047	bushing	1
12	61500130080	gasket	1
13	61500080165	cap	1
14	90003802432	hexagon bolt	4
15	90003802438	hexagon bolt	6
16	90003800569	hexagon bolt	2
17	90003802411	hexagon bolt	4
18	90003802419	hexagon bolt	7

19	612600130001	hexagon nut	1
20	90003932023	gasket	9
21	61500080130	compactring	1
22	90003930261	gasket	4
23	61560130012	air compressor gear	1
24	409020045	gasket	1
25	612600130001	hexagon nut	1
26	612600130046	clip nut	1
27	61500130097	oil seal seat	1
28	90003802415	hexagon bolt	4
29	192320002	sealing ring	1
30	612600130073	oil retaining disk	1

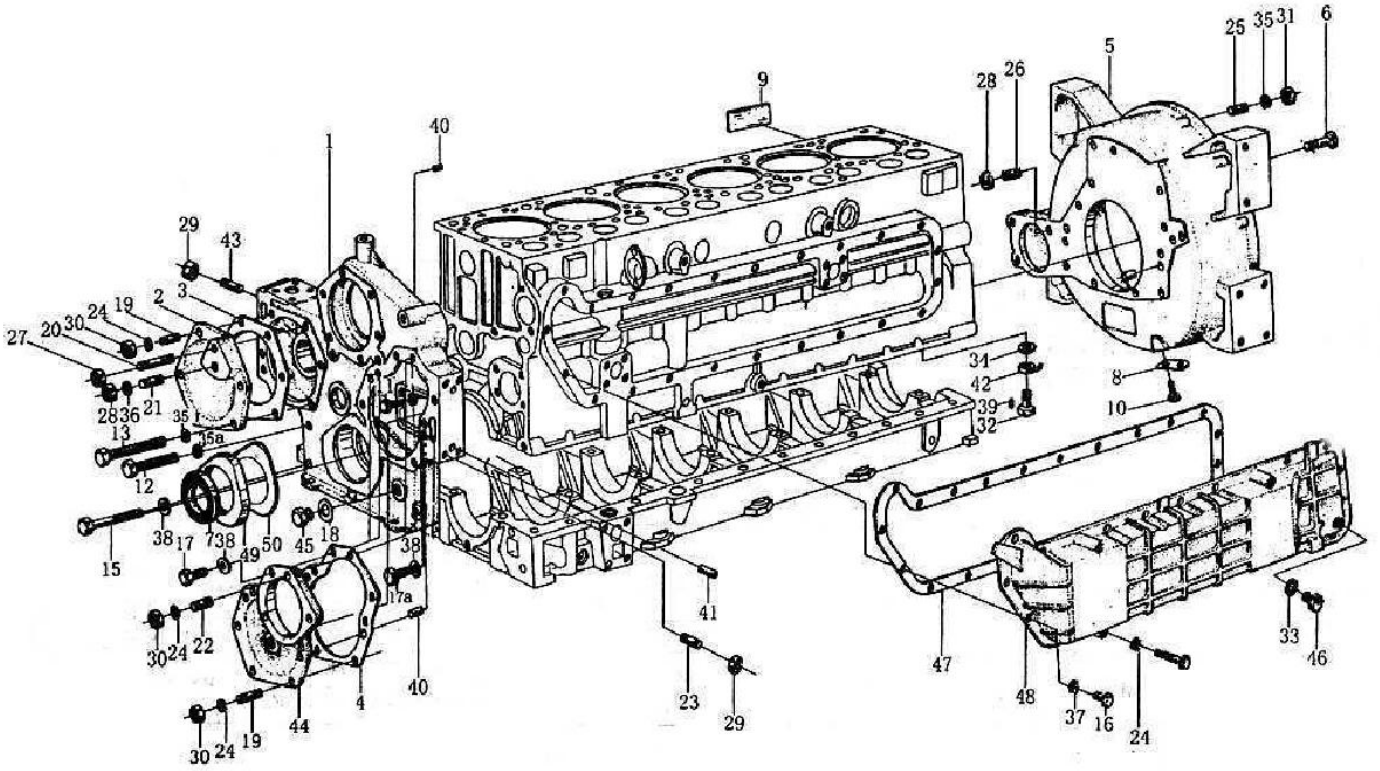

GEAR CASE & FLYWHEEL HOUSING, WD615-II			
Serial	Number	Name	Quantity
1	61560010094B	gear case	1
2	61560010069	gear cap of air compressor	1
3	614 010040	pad for gear cap of air compressor	1
4	614 010070	pad for gear cap of camshaft	1
5	61500010012	flywheel housing	1
6	61500010101	flywheel housing bolt	7
06a	61500010062	flywheel housing bolt	6
7	61500010037	front oil seal	1
8	1800210011	cap of observing hole	1
9	612600010193	nameplate	1
10	90003802511	hexagon head bolt (M10*18 D00933)	2
11	90003802523	hexagon head bolt (M10*25 D00933)	3
12	90003802561	hexagon head bolt (M10*75 D00933)	6
13	90003802576	hexagon head bolt (M10*90 D00933)	1
14	90003800458	hexagon head bolt (M8*70 DOO931)	4
15	90003800571	hexagon head bolt (M10*80 D00931)	1
16	90003802424	hexagon head bolt (M8*25 D00933)	19
17	90003862524	inner hexagon screw (M10*20 D00912)	1

17a	90003862532	inner hexagon screw (M10*30 D00912)	1
18	90003098086	sealing gasket (A30*36 D07603)	1
19	90003813429	double head bolt (M8*22 D00939)	12
20	90003813470	double head bolt (M8*60 D00939)	3
21	90003811531	double head bolt (M10*30 D00835)	1
22	90003813443	double head bolt (M8*30 D00939)	1
23	90003813628	double head bolt (M12*30 D00939)	6
24	90003932023	elastic gasket (B8 D00137)	41
25	90003813537	double head bolt (M10*35 D00939)	12
26	90003813527	double head bolt (M10*28 D00939)	3
27	90003888451	hexagon bolt (VM8 D00980)	2
28	90003888452	hexagon bolt (VM10 D00980)	5
29	90003888453	hexagon bolt (VM12 D00980)	8
30	90003871252	hexagon nut (M8 D00934)	16
31	90003871305	hexagon nut (M10 D00934)	12
32	90003962621	hollow bolt (A8 D07623)	6
33	90003098014	sealing gasket (A14*18 D07603)	1
34	90003098015	sealing gasket (A14*20 DIN7603)	6
35	90003932024	elastic gasket (B10 D00137)	1
35a	90003931122	spring gasket (B10 D00127)	21
36	90003930012	gasket (10.5 D07340)	1
37	90003930271	gasket	1
38	90003932025	elastic gasket	2
39	90003909603	column pin	6
40	90003901507	column pin	4
41	90003901604	column pin	6
42	61560010047	components for inject nozzle	6
42	61560010090	components for inject nozzle	6
43	90003813638	double head bolt (M12*35 D00939)	2
44	61500010008A	camshaft gear cap	1
45	90003962051	hexagon head bolt (CM30*1.5 D07604)	1
46	90003962020	hexagon head bolt (A14*1.5 D07604)	1
47	614010084B	pad for oil cooler cap	1
48	614010083B	oil cooler cap	1
49	AZ1500010336A	front oil seal	1
50	614010106A	pad for front oil seal	1
51	90003862327	inner hexagon column screw	4

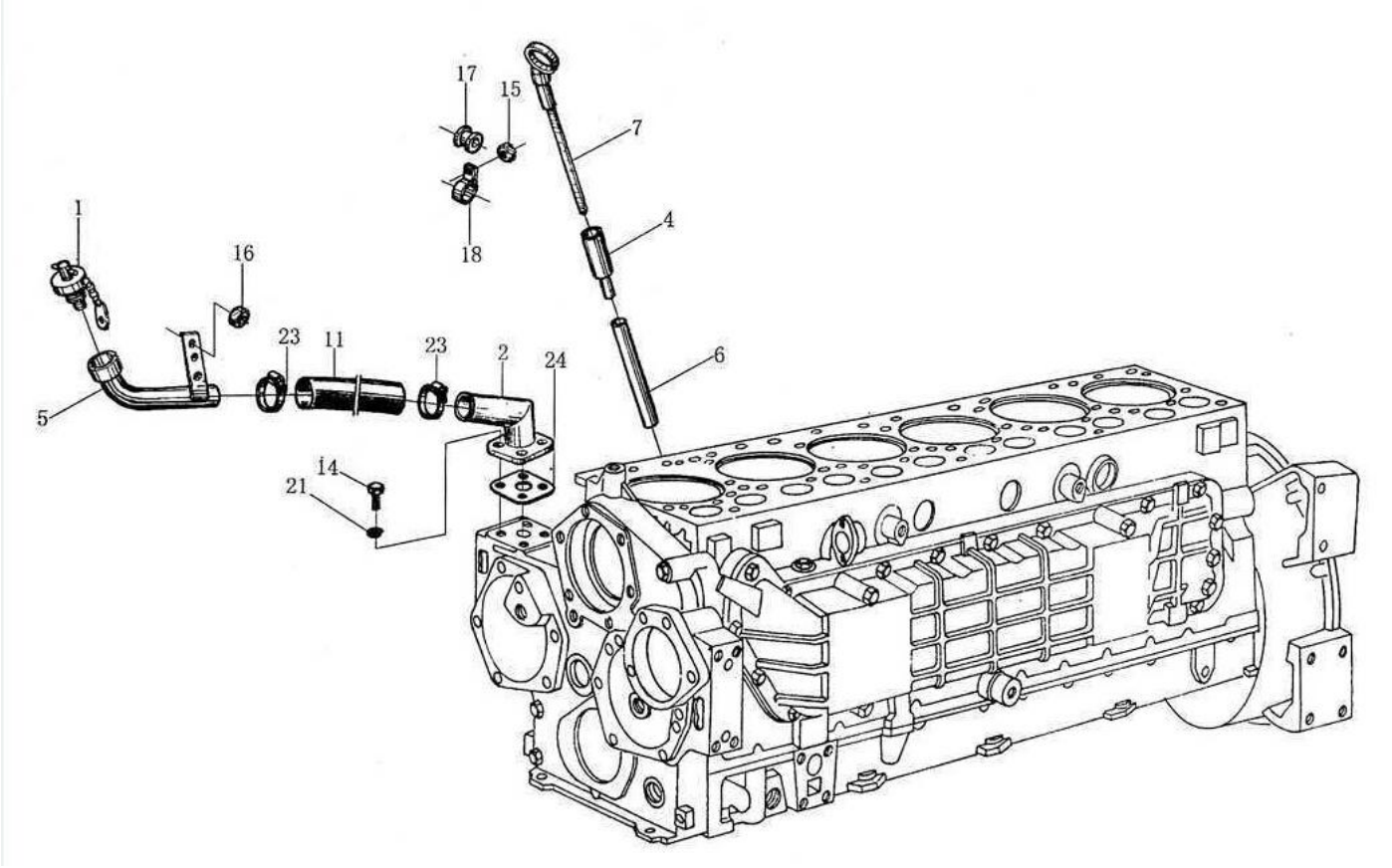

FILLING PIPE, WD615-II			
Serial	Number	Name	Quantity
1	612600010489	components for filling pipe cap	1
2	61560010028	components for filling pipe	1
5	612600010522	components for filling pipe	1
11	61500010079	rubber soft pipe	1
14	90003802321	hexagon bolt (M6*16 D00933)	4
16	90003888451	hexagon tenshioning nut	1
21	90003931082	spring gasket	4
23	90003989306	soft pipe clip	2
24	614 010086	pad for filling pipe	1
25	612600010532	oil scale	1
25	612600010554	oil scale	1
26	61800010331	components for oil scale	1
26	612600010533	cap of oil scale	1
27	61800010334	components for oil scale pipe	1
27	612600010557	oil scale pipe	1
28	612600010638	rubber pipe clip	1

29	612600010647	pipe clamp	1
30	90003802411	hexagon bolt	1
31	612600010609	supporting shoe	1
31	612600010616	supporting shoe	1

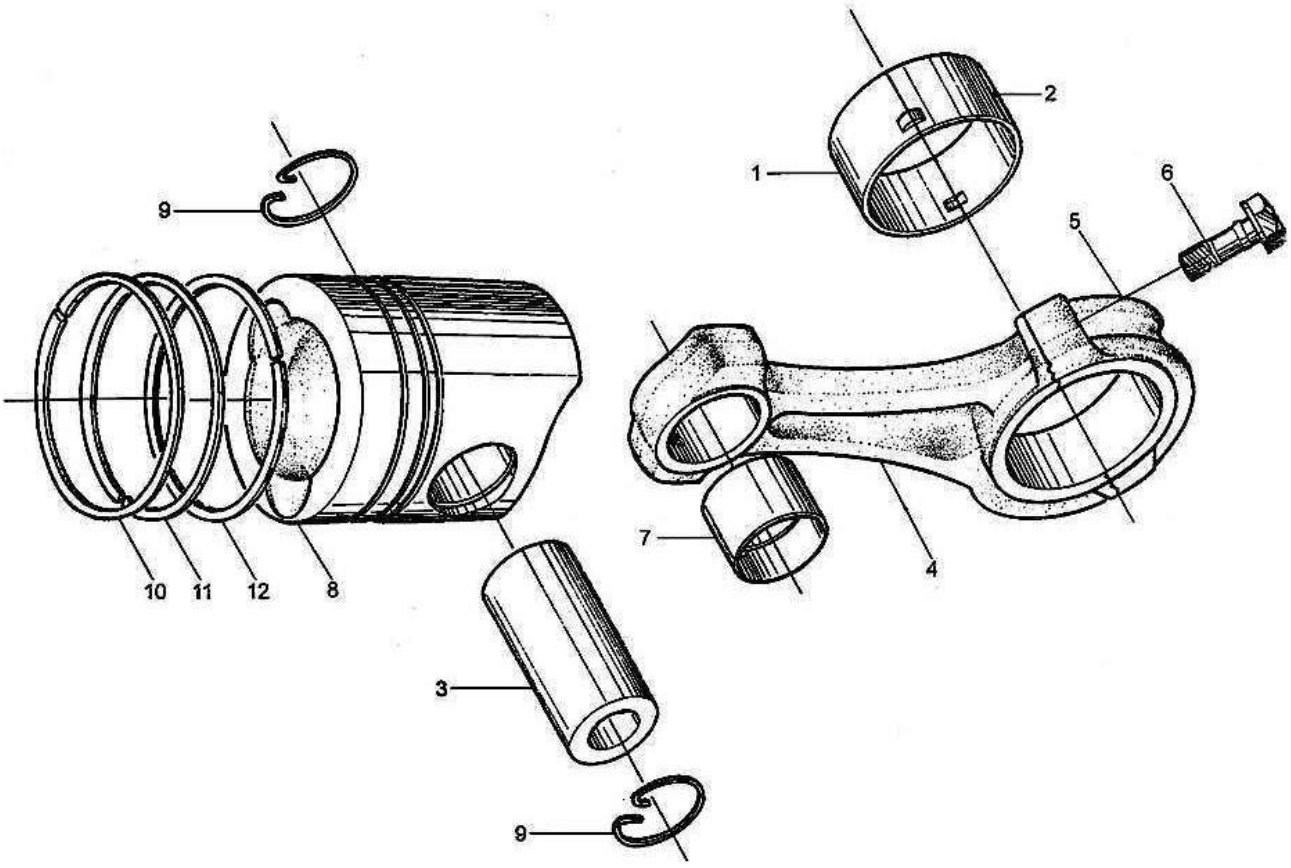

PISTON & CONNECTING ROD, WD615-II			
Serial	Number	Name	Quantity
1	61560030033/34	connecting rod bearing	6
2	61560030034	connecting rod bearing	6
3	61560030013	piston pin	6
4	61500030009	connecting rod	6
4-1	61500030008	connecting rod body	6
4-2	61500030022	connecting rod cap	6
4-3	81500030023	connecting rod bolt	12
4-4	61500030067	connecting rod busing	6
8	61560030042	piston	6
8-1	61560030043	piston	6
8-2	81560030012	piston pin retaining ring	12
8-3	61560030047	keystone ring	6
8-4	61560030078	taper face ring	6
8-5	61560030045	oil ring	6
3+4+5	61200030058	piston ring	1 set