SINOTRUK

WD615, EURO III ENGINE SPARE PARTS CATALOG

https://www.sinosoon.com Email:market@sinosoon.com

INDEX

CYLINDER BODY 1#	Page 3
CYLINDER BODY 2#	Page 6
CRANKSHAFT & FLYWHEEL	Page 8
PISTON & CONNECTING ROD	Page 10
CYLINDER CAP & VALVE MECHANISM 1#	Page 11
CYLINDER CAP & VALVE MECHANISM 2#	Page 13
WATER PUMP & COOLING SYSTEM	Page 15
OIL PUMP & FILTER	Page 17
FUEL SUPPLY SYSTEM 1#	Page 19
FUEL SUPPLY SYSTEM 2#	Page 21
AIR INLET & EXHAUST 1#	Page 25
AIR INLET & EXHAUST 2#	Page 28
AIR COMPRESSOR	Page 30
ELECTRONIC 1#	Page 31
ELECTRONIC 2#	Page 33
OIL PAN	Page 34
PTO	Page 35

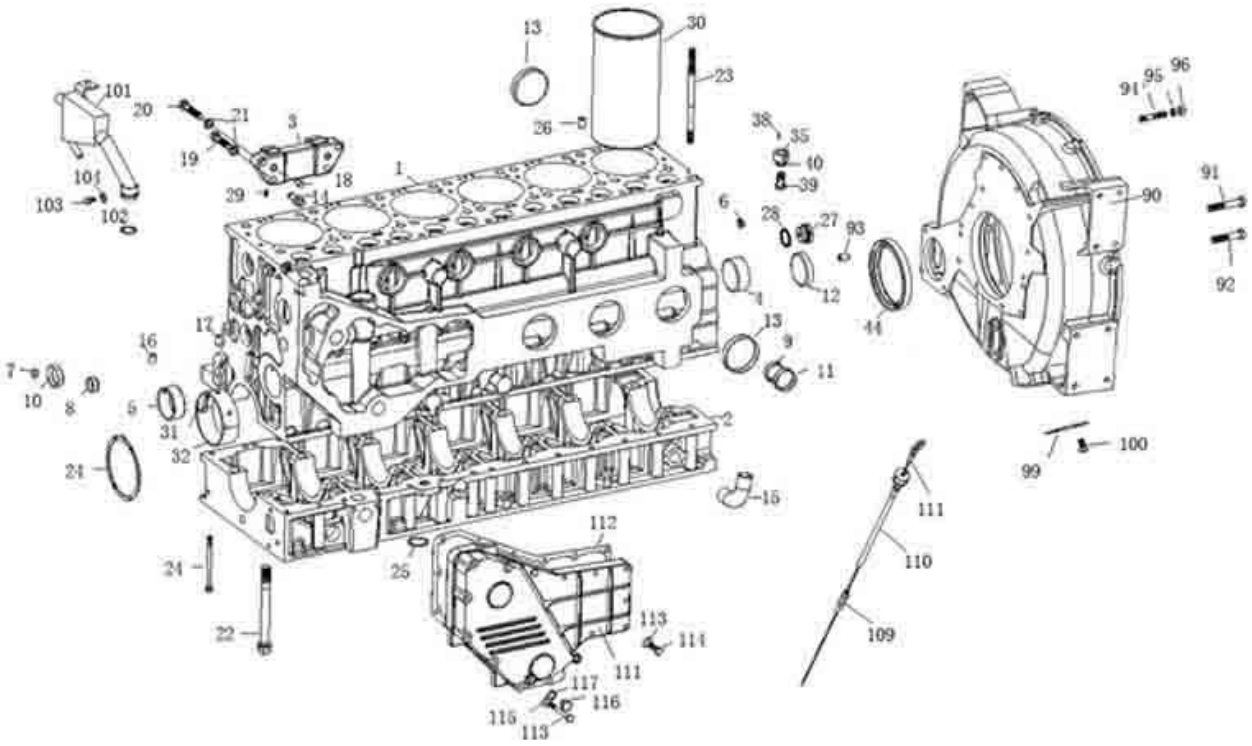

CYLINDER BODY 1#		
WD615 EURO-III ENGINE PARTS CATALOGS		
Serial	Name	Part Number
1	Cylinder block ass	AZ1096010190
1	Cylinder block ass	AZ1096010020
1	Cylinder block ass	AZ1099010077
1	Cylinder block ass	AZ1099010081
1	Cylinder block	AZ1096010134
1	Cylinder block	AZ1095010010
1	Cylinder block	AZ1099010078
1	Cylinder block	AZ1099010079
2	Crankcase	61500010366C
2	Crankcase	161500010369
3	Bracket	VG1540010019
4	Bush	VG1560010029
5	Bush	VG2600010990
6	Core plug	90003984080
7	Core plug	90003989480

8	Core plug	90003989204
9	Core plug	90003989289
10	Core plug	90003982121
11	Core plug	90003989215
12	Core plug	90003989288
13	Core plug	90003989210
14	Connecting piece	VG2600130026
15	Pipe	VG2600070097
15	Pipe	VG1460010011
16	Dowel pin	90003901604A
17	Dowel pin	Q5211220
18	Dowel pin	Q5211216
19	Bolt	90003802650
20	Bolt	90011350045
21	Spring washer	90003931142
22	Bolt	VG14010114
22	Bolt	VG14010217
23	Stud	VG1500010185
24	Bolt	90003802493
25	Gasket	VG1400010032
26	Dowel pin	190003901604
27	Bolt	VG1460070011
28	Spring dowel pin	90003909626
29	Bolt	90003962051
30	Liner	VG1540010006
31	Main bearing	VG1500010046
32	Main bearing upper half	VG1540010021
32	Main bearing upper half	VG1540010022
34	Thrust bearing	VG1500010125
35	Spraying nozzle assembly	VG2600010659
35	Spraying nozzle assembly	VG1560010090
35	Spraying nozzle assembly	VG1560019090
38	Spring dowel pin	90003909603
39	Bolt	90003962621
40	Gasket	VG9003080001
90	Flywheel housing	R61540010010
91	Bolt	VG1500010062
92	Bolt	VG1500010101
93	Dowel pin	90003901604

94	Stud	90003813537
95	Spring washer	90003931122
96	Nut	90003871305
97	Stud	90003813527
98	Nut	90003888452
99	Cover	VG1800210011
100	Bolt	90003802511
101	Oil separator	VG1500019045A
101	Oil separator	VG1099019055
102	O-ring	Q734B2650265
103	Bolt	90003802321
104	Spring washer	90003936101
105	Clamp	VG31100040007
106	Hose	VG12G00040038
107	Hose clip	90003989301
108	Hose	VG1500010174
108	Hose	VG2600011106
108	Hose	VG1500010176
109	Clamp	VG609E110049
110	Hose clip	90003171356
111	Cover	VG1540010014A
112	Joint	VG1540010015A
113	Bolt	90003800467
114	Bolt	90003802437
115	Spring washer	90003932023
116	Bolt	90003962020
117	Washer	90003098014
118	Gauge	VG2600010705
118	Gauge	VG1500019077
119	Gauge	VG1500010600
119	Gauge	VG1500010500
121	Clamp piece	VG2600010445
122	Hose clip	VG2600010638
123	Supporting block	VG1500010031
124	Bolt	9000382511
125	Spring washer	90003931122
126	Washer	90003930271

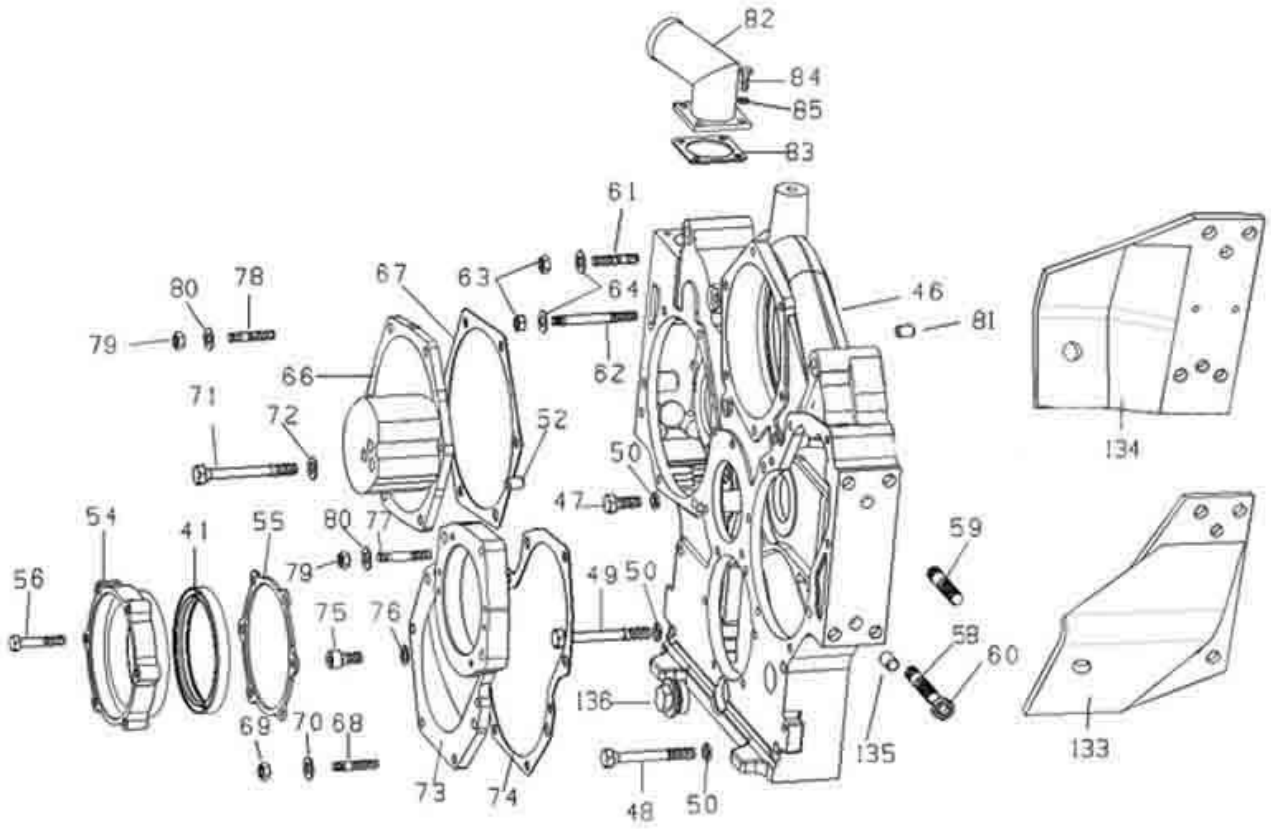

CYLINDER BODY 2#		
WD615 EURO-III ENGINE PARTS CATALOGS		
Serial	Name	Part Number
41	Front gasket	VG1047010038
44	Back gasket	VG1047010050
46	Gear case	61557010008
47	Bolt	90003802523
48	Bolt	90003802561
49	Bolt	90003802571
50	Spring washer	90003931122
51	Gasket	VG288730061
52	Dowel pin	90003901507
53	Gasket	VG61000010134
54	Front gasket bracket	VG2600010928
55	Joint	VG2600010934
56	Bolt	90011260039
57	Spring dowel pin	90003900085
58	Stud	90003813628

59	Stud	90003813638
60	Nut	90003888453
61	Stud	90003813429
62	Stud	90003813467
63	Nut	90003871252
64	Spring washer	90003932023
65	Stud	90003813447
66	Cover	VG2600010830
66	Cover	VG1560010069
67	Joint	VG14010040
68	Stud	90003813429
69	Nut	90003871252
70	Spring washer	90003932023
71	Bolt	90003802576
72	Spring washer	90003932024
73	Cover	VG1500010008A
74	Joint	VG14010070
75	Bolt	90003862524
76	Spring washer	90003932025
77	Stud	90003813443
78	Stud	90003813429
79	Nut	90003871252
80	Spring washer	90003932023
81	Dowel pin	90003901507
82	Nozzle	VG1560010028
82	Nozzle	VG1500019039
83	Joint	VG14010086
84	Bolt	90003802321
85	Spring washer	90003931082
131	Bolt	90003802442
132	Washer	90003930261
133	Support	VG9100590006
134	Support	VG9100590009
135	Dowel pin	190003900085

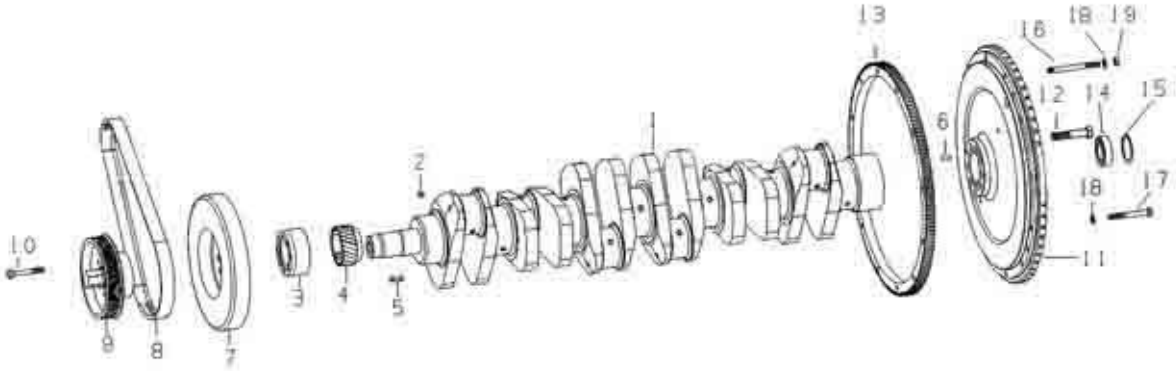

CRANKSHAFT & FLYWHEEL		
WD615 EURO-III ENGINE PARTS CATALOGS		
Serial	Name	Part Number
1	Crankshaft ass	61560020029
1	Crankshaft ass	61500020071
1	Crankshaft	61560020024
1	Crankshaft	61500020012
2	Jam	VG1560029001
3	Flange	VG1500020070
4	Crankshaft gear	VG14020038
5	Key	Q5510828
6	Dowel pin	90003901418
7	Vibration damper	VG1560020010
7	Vibration damper	VG1540020003
8	Ribbed belt	VG1062060007
8	Ribbed belt	VG2600020253
8	Ribbed belt	VG1062060006
9	Belt pulley	VG1560020020
9	Belt pulley	VG1062020001
10	Bolt	90003802558
11	Flywheel	AZ1540020205
11	Flywheel	AZ1092020003
11	Flywheel	R61540020204
12	Bolt	VG1500020046
13	Ring gear	VG2600020208

14	Ball bearing	90003311416
15	Circlip	90003934310
16	Spring washer	90003932024
17	Bolt	90003800579
18	Stud	90003813571
19	Nut	90003871305

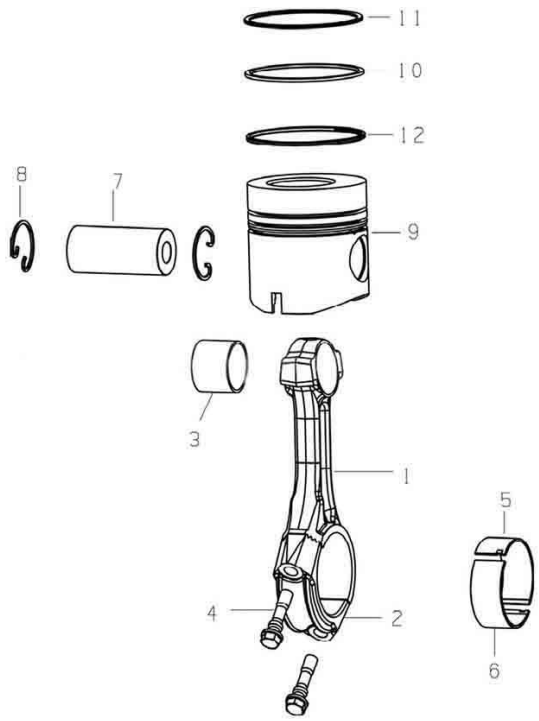

PISTON & CONNECTING ROD		
WD615 EURO-III ENGINE PARTS CATALOGS		
Serial	Name	Part Number
1	Connecting rod	161500030008
2	Connecting rod cover	161500030022
3	Connecting rod bush	VG1500030077
4	Connecting rod bolt	VG1500030023
5	Connecting rod bearing	VG1560037034
5	Connecting rod bearing	VG1540030015
6	Connecting rod bearing	VG1560037033
6	Connecting rod bearing	VG1540030016
7	Piston pin	VG1560030013
8	Piston pin retaining ring	VG1560030012
9	Piston	VG1560030010
9	Piston	VG1560030004
9	Piston	VG1560037011
10	Conical ring	VG1540030006
11	Double ladder ring	VG1540030007
12	Spiral spring oil ring	VG1560030045

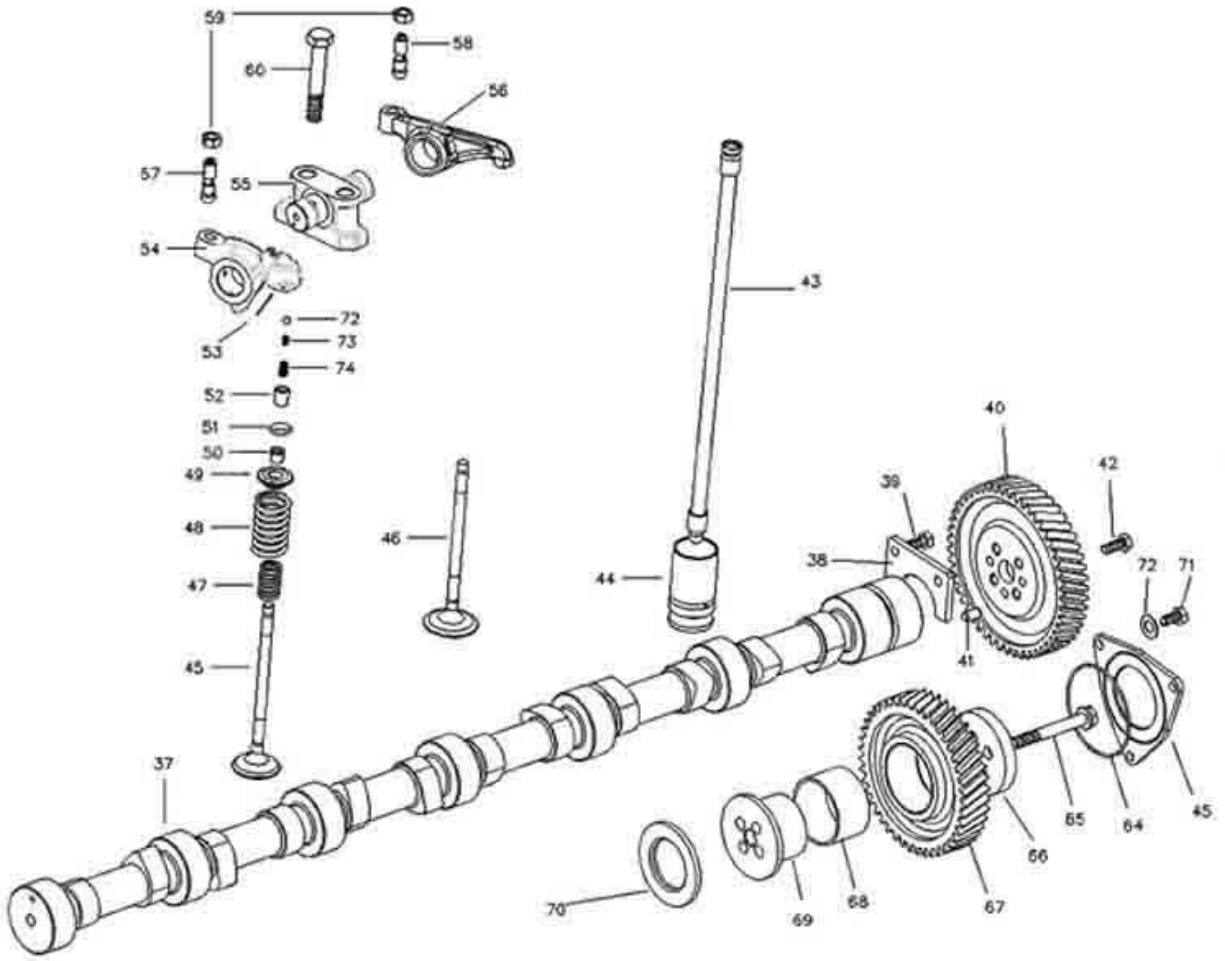

CYLINDER CAP & VALVE MECHANISM 1#		
WD615 EURO-III ENGINE PARTS CATALOGS		
Serial	Name	Part Number
1	Cylinder head	AZ1096040028
2	Ring (outlet)	VG1560040057
3	Ring (inlet)	VG1560040037
4	Valve guide	VG1560040031
5	Nozzle holder	VG1096040001A
6	Nozzle holder gasket	VG1540040010
7	Bolt	VG1540040011
8	Core plug	90003989721
9	Core plug	90003989294

10	Joint	VG1500040065
11	Scraper	VG1560040032
12	Bolt	VG1500040023
14	Nut	VG1200040034
15	Clip	VG1200040023A
16	Clip	VG1200040027
17	Clamping yoke	VG1500040009
18	Rocker cover	VG1500040067
19	Ring	VG14040065
20	Bolt	90003800466
21	Bolt	VG1096040021
22	Spring washer	90003932023
23	Bolt	Q150B0610
24	Spring washer	Q41806
25	Support	VG1096080082
26	Pipe	VG1096040330
27	Bolt	90003800466
28	Spring washer	90003932023
29	Water outlet take over	VG1096040332
30	Water outlet take over gasket	VG1096040331
31	Stud	90003813467
32	Nut	90003871252
33	Spring washer	90003932023
34	Washer	90014040007
35	Stud	90003813429
36	Connecting piece	VG1500060045

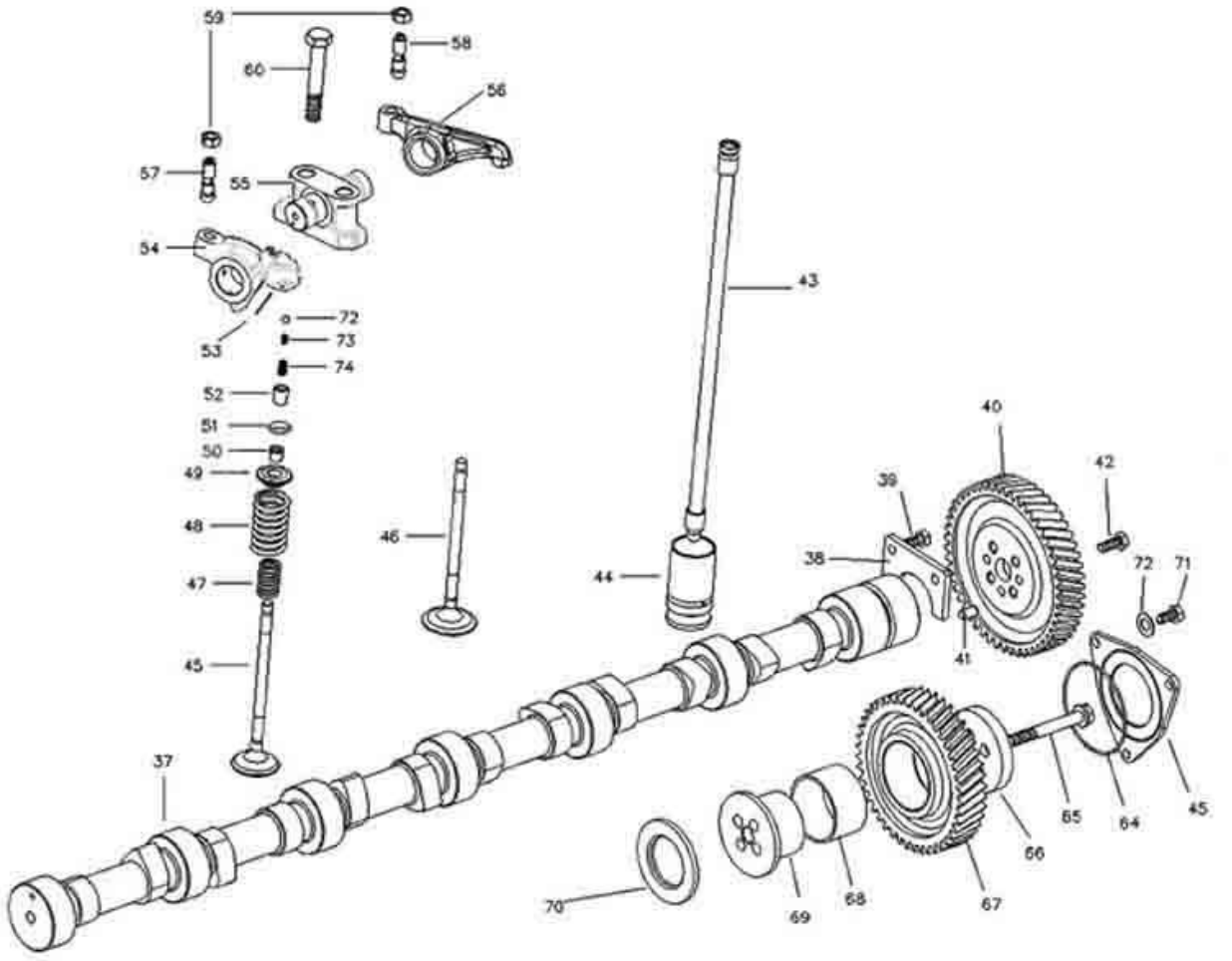

CYLINDER CAP & VALVE MECHANISM 2#		
WD615 EURO-III ENGINE PARTS CATALOGS		
Serial	Name	Part Number
37	Camshaft	VG1500050096
38	Flange	VG14050133
39	Bolt	90003802411
40	Camshaft gear	VG14050053
41	Dowel pin	90003901409
42	Bolt	90003802443
43	Push rod assembly	VG1500050070

44	Push rod	VG1500050032
45	Outlet valve	VG1560050041
45	Outlet valve	VG1560050027
46	Inlet valve	VG1560051001
47	Valve spring	VG1500050001
48	Valve spring	VG1500050002
49	Spring plate	VG1500050109
50	Valve cone	VG1500050025
51	Valve cap	VG1500050105
52	Rocker arm piston	VG1500050044
53	pin	90016220001
54	Outlet valve rocker arm	VG1500050041
55	Rocker arm pedestal	VG1500050122A
56	Inlet valve rocker arm	VG14050048
57	Bolt	VG1500050017
58	Bolt	VG14050010
59	Nut	VG2130050065
60	Bolt	Q150B12100TF2
61	Cover	VG1560050045
62	Bolt	90003802411
63	Spring washer	90003932023
64	O-ring	90003120602
65	Bolt	VG1560050059
66	Clamp	VG1560050045
67	Intermediate gear	VG1560050052
68	Holder	VG1560050051
69	Intermediate gear-axle	VG1540059031
70	Intermediate gear joint	VG1540059032
71	Clip	VG1500040012
72	Steel ball	90016210015
73	Spring	VG1500050036
74	Spring	VG1500050026
75	Eye screw	VG14010388

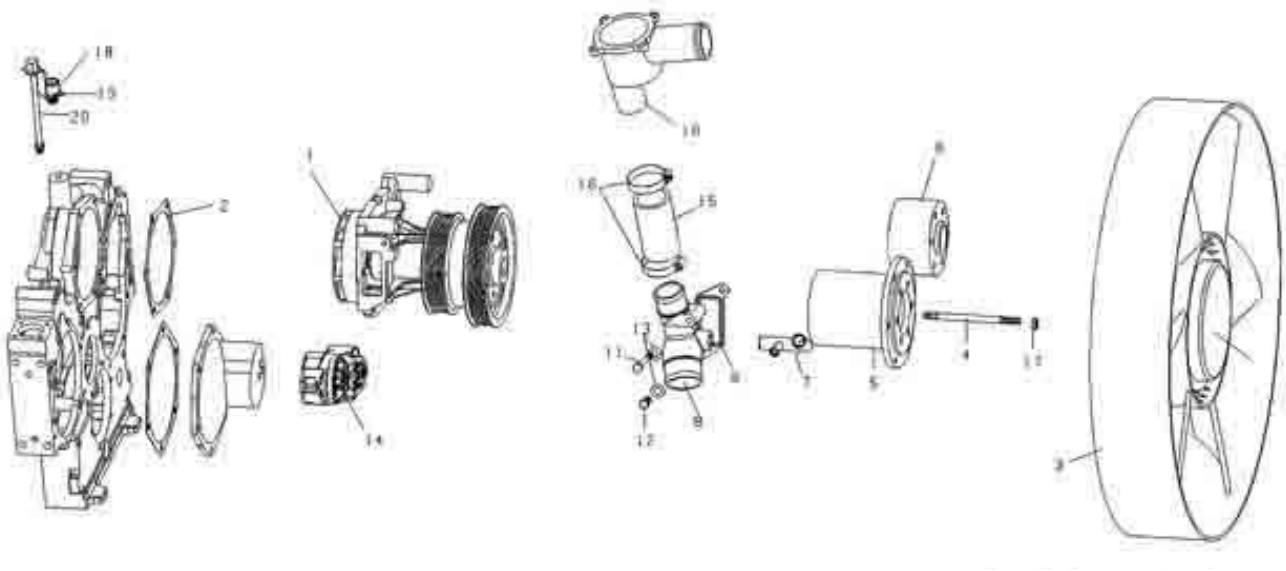

WATER PUMP & COOLING SYSTEM		
WD615 EURO-III ENGINE PARTS CATALOGS		
Serial	Name	Part Number
13	Spring washer	90003932023
1	Water pump housing	VG1500060051
1	Water pump housing	VG1062060010
2	Gasket	VG140608
2	Gasket	VG1500060108
3	Fan	VG2600060446
3	Fan	VG1500060447
3	Fan	VG1099060201
4	Stud	90003813148
4	Stud	Q12010170F3
5	Intermediate piece	VG1500060240
5	Intermediate piece	VG1500060241
6	Intermediate piece	VG1038060002
7	Connecting piece	VG1560060004
8	Pipe connecting piece	VG1560060023

8	Pipe connecting piece	VG1560060022A
9	Joint	VG14060024
10	Thermostat	VG1096069601
10	Thermostat	VG1099060001
10	Thermostat	VG1096069602
10	Thermostat	VG1099060004
11	Bolt	90003800467
12	Bolt	90003802424
14	Roll	VG2600060313
15	Hose	VG1096060033
15	Hose	VG6100060276
16	Hose clamp	90003989308
17	Nut	90003888452
17	Nut	90003888451
18	Bolt	Q218B1625
19	Spring lockwasher	190003931182
20	Water pump grease nozzle	VG2600060456

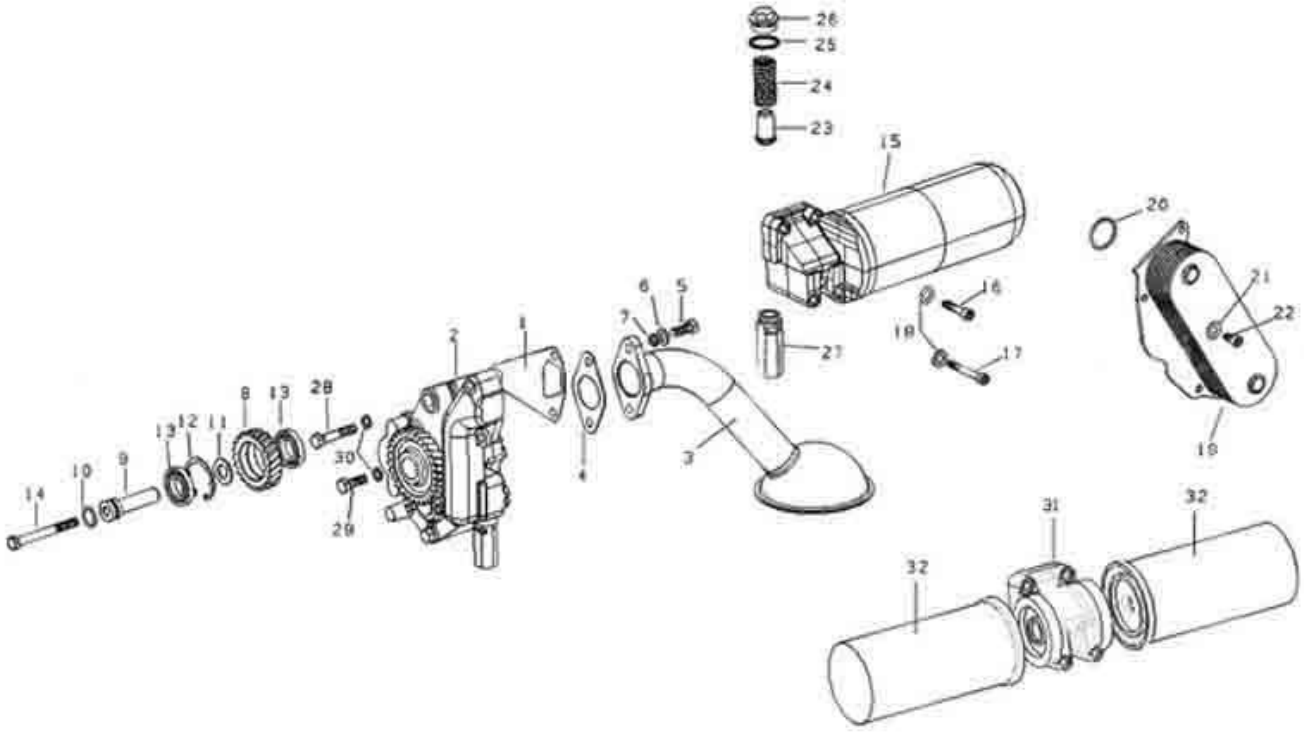

OIL PUMP & FILTER		
WD615 EURO-III ENGINE PARTS CATALOGS		
Serial	Name	Part Number
1	Gasket	VG14070055
2	Oil pump ass	VG1500070021
3	Strainer	VG1800070051
3	Strainer	VG1800070052
4	Washer	VG140778
5	Bolt	90003802523
6	Washer	90003930271
7	Spring washer	90003931122
8	Gear	VG14070061

9	Gear axle	VG14070056
10	O-ring	VG14070155
11	Intermediate ring	VG14070049
12	Ring	90003934732
13	Angular ball bearing	90003311410
14	Bolt	90003802578
15	Oil filter ass	VG1540070005
16	Socket bolt	90003862443
17	Socket bolt	90003862482
18	Spring washer	90003932023
19	Oil cooler	VG1500010334
19	Oil cooler	VG1500010335
20	Gasket	VG1400010032
21	Socket bolt	90003862419
22	Spring washer	90003932023
23	Safety valve	VG14070069
24	Safety valve spring	VG14070068
25	Gasket	VG2600010735
26	Socket bolt	90003962051
27	Pressure limit valve	VG1500070097
28	Bolt	90003800551
29	Bolt	90003802527
30	Spring washer	90003931122
31	Oil filter body	VG1500070051
32	Oil filter	VG61000070005

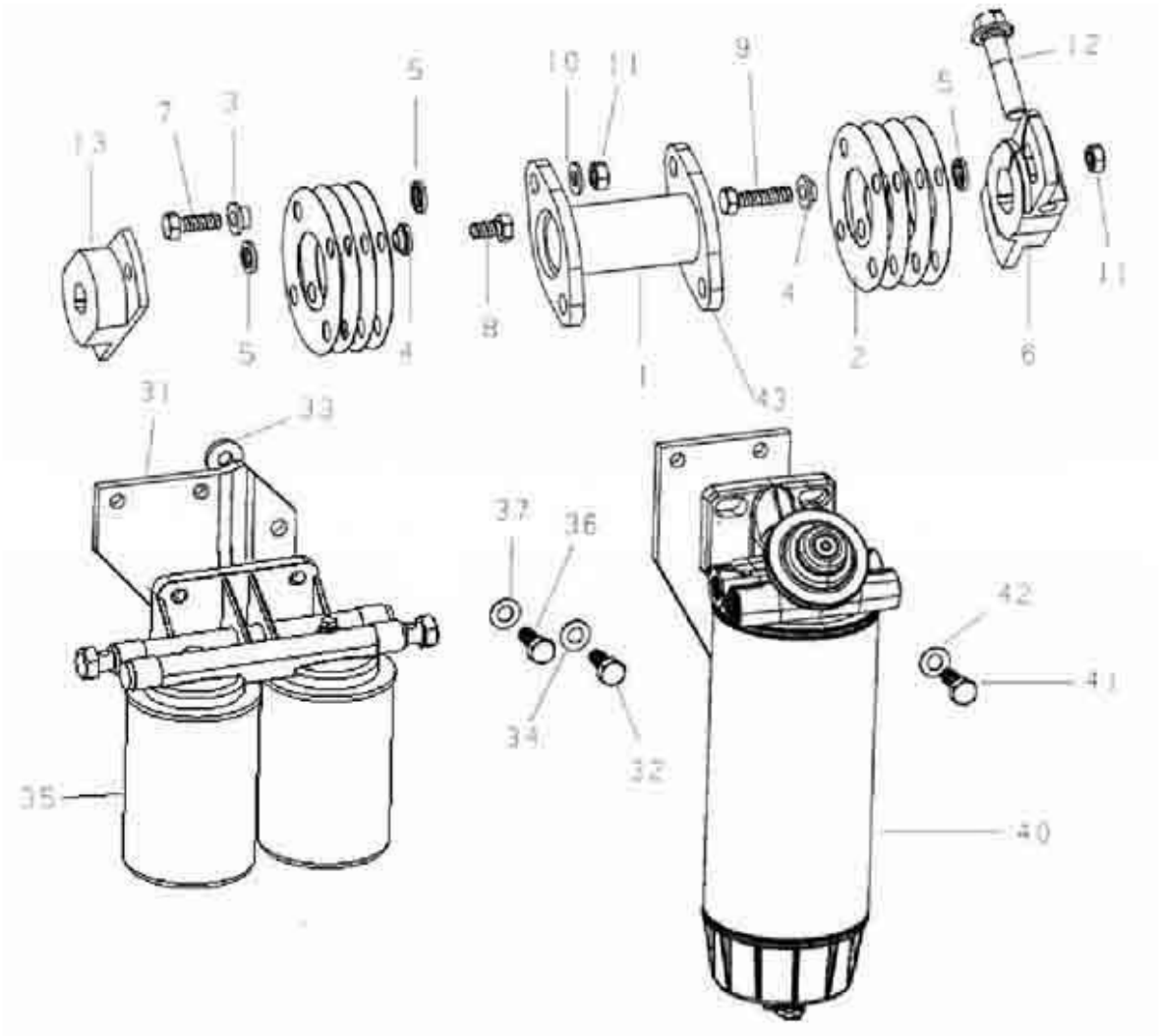

FUEL SUPPLY SYSTEM 1#		
WD615 EURO-III ENGINE PARTS CATALOGS		
Serial	Name	Part Number
1	Coupling flange	VG1540080299
2	Spring sheets	VG1540080004B
3	Bush	VG1540080295
4	Bush	VG1540080296

5	Washer	VG1540080007B
6	Injection adjusting block	VG1540080293
7	Bolt	90003802544
8	Bolt	90003802513
9	Bolt	90003802536
10	Washer	VG1540080297
11	Nut	90003871308
12	Bolt	VG1500089018
13	Flange	VG1540080292A
31	Bracket	VG1540080126
32	Bolt	90003802523
33	Washer	90003930012
34	Spring washer	90003932024
35	Fuel filter	VG1540080030A
36	Bolt	90003802527
37	Washer	90003931122
38	Overflow valve	VG1540080022
39	Washer	VG2600080200
40	Fuel filter	VG1540080132A
41	Bolt	90003802523
42	Spring washer	90003931122
43	Coupling	VG1540080300

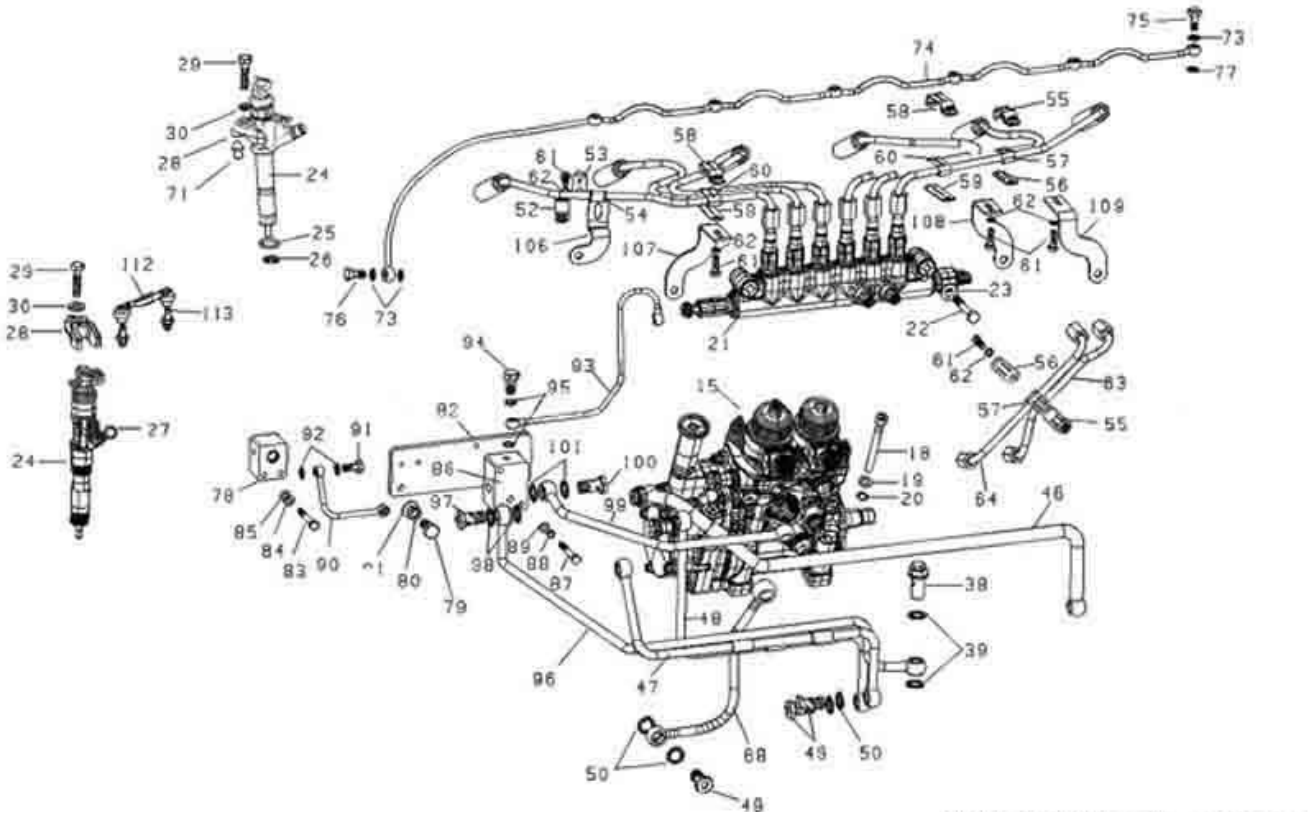

FUEL SUPPLY SYSTEM 2#		
WD615 EURO-III ENGINE PARTS CATALOGS		
Serial	Name	Part Number
14	Nut	R61540080311
15	Injection pump	R61540080101
16	Woodruff key	R61540080312
17	Spring washer	90014350010
18	Socket bolt	VG1540080091
19	Washer	90003930261
20	Washer	VG188250083
21	Rail	R61540080016
22	Bolt	90003802455
23	Spring washer	90003932023
24	Fuel injector ass	VG1096080010
24	Fuel injector ass	R61540080017A
25	O-ring	VG1096080003
26	Washer	VG1540080018A

26	Washer	VG1540080019B
27	O-ring	VG1540080095
28	Injector clamp	VG1096080021
28	Injector clamp	VG1540080021C
29	Bolt	Q150B0840TF2
29	Bolt	Q150B0835TF2
30	Spherical washer	VG1540080024
44	Bolt	90003962621
45	Washer	VG2600080200
46	Hose	VG1099089156
47	Hose	VG1099089098
48	Hose	VG1099089099
49	Bolt	90003962621
50	Washer	VG2600080200
51	High-pressure fuel line	VG1096080400
52	Clamp-upper piece	VG1540080040
52	Clamp-upper piece	VG1540080057
53	Clamp-lower piece	VG1540080048
54	Gasket	VG1540080049
55	Clamp-upper piece	VG1540080058
56	Clamp-lower piece	VG1540080052
57	Gasket	VG1540080053
58	Clamp-upper piece	VG1540080059
59	Clamp-lower piece	VG1540080055
60	Gasket	VG1540080056
61	Bolt	90003802331
62	Spring washer	90014350003
63	Injection pipe (1)	VG1096080321
63	Injection pipe (1)	VG1540089093
64	Injection pipe (2)	VG1096080322
64	Injection pipe (2)	VG1540089094
65	Oil line assembly	VG1560070060
66	Bolt	90003962607
67	Washer	90003098010
68	Oil return line	VG1540089097
69	Bolt	90003962621
70	Washer	VG2600080200
71	Pin	VG1096080022
73	Washer	VG2600080201

74	Fuel leak-off line assembly	VG1096080310A
74	Fuel leak-off line assembly	VG1099089066
75	Bolt	VG1096080081
75	Bolt	VG1540080081
76	Bolt	1.90004E+11
77	Washer	VG9003080003
78	Fuel temp sensor bracket	VG1540080067
79	Bolt	Q150B0645
80	Spring washer	90014350003
81	Washer	90014330002
82	Mounting plate	VG1540080298
83	Bolt	90011350026
84	Spring washer	90003931122
85	Washer	90003930271
86	Oil return bracket	VG1540080071
87	Bolt	Q150B0645
88	Spring washer	90014350003
89	Washer	90014330002
90	Fuel leak-off line	VG1540080072
91	Bolt	90003962603
92	O-ring	VG2600080201
93	Fuel return pipe	VG1096080073
93	Fuel return pipe	VG1540089073
94	Bolt	90003962607
95	O-ring	90003098010
96	Fuel return pipe (to filter)	VG1099089074
97	Blot	90003962621
98	O-ring	VG2600080200
99	Fuel return pipe (to pump)	VG1540089096
100	Blot	90003962621
101	O-ring	VG2600080200
103	Blot	90003962621
104	O-ring	VG2600080200
105	pipe clip	90003171697
106	Supporting plate（4）	VG1096080314
106	Supporting plate（1）	VG1540080076A
107	Supporting plate（3）	VG1096080313
107	Supporting plate（2）	VG1540080077
108	Supporting plate（4）	VG1540080079

108	Supporting plate（3）	VG1540080078A
109	Supporting plate（3）	VG1540080078A
109	Supporting plate（4）	VG1540080079
110	Nut	90003871252
111	Washer	90003932023
112	Fuel leak-off line assembly	VG1099089065
113	Bolt	VG1099089064

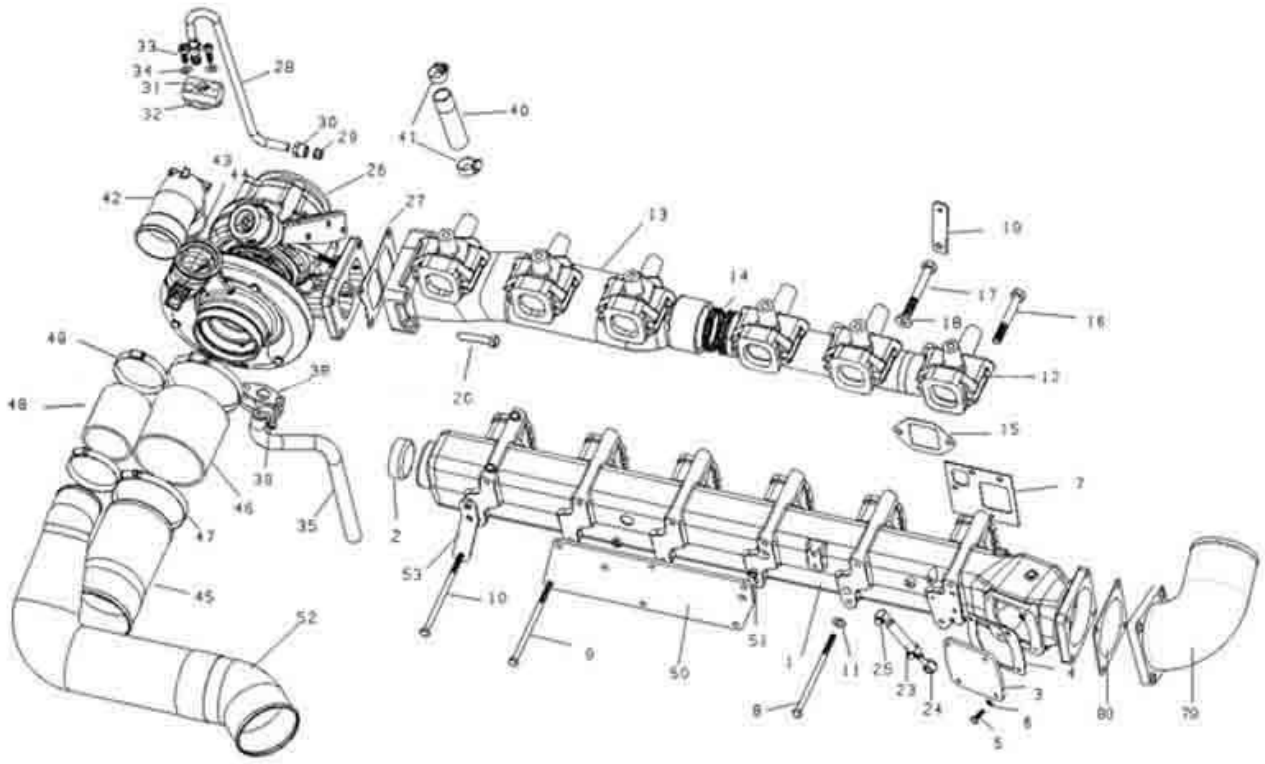

AIR INLET & EXHAUST 1#		
WD615 EURO-III ENGINE PARTS CATALOGS		
Serial	Name	Part Number
1	Intake manifold	VG1540110043
2	Core plug	90003989286
3	Intake manifold cover	VG1540110011A
4	Gasket	VG1540110018A
5	Bolt	90003802331
6	Spring washer	90003932008
7	Gasket	VG1500110024
8	Bolt	VG1540110025
9	Bolt	90003800497
11	Spring washer	90003932023
12	Exhaust manifold	VG2600111137
12	Exhaust manifold	VG1540110201
12	Exhaust manifold	VG2600111290
12	Exhaust manifold	VG1540110003

13	Exhaust manifold	VG2600111136
13	Exhaust manifold	VG1500110123
13	Exhaust manifold	VG1540110202
13	Exhaust manifold	VG2600111280
13	Exhaust manifold	VG2600110855
13	Exhaust manifold	VG1540110004A
14	Seal ring	VG2600110162
14	Seal ring	VG1540110005
15	Gasket	VG1560110111
16	Bolt	VG2600111052
16	Bolt	VG1560110104
19	Support	VG1047110105
19	Support	VG1095110002
20	Stud	VG2600111429
20	Stud	VG2600111428
20	Bolt	VG1560110241
21	Bolt	Q150B0615
22	Spring washer	90014350003
23	Hose	VG1540110035
24	Connecting pipe	VG1540110038
25	Clamp	90003989300
26	Turbo charger	VG1029110060
26	Turbo charger	VG1540110066
26	Turbo charger	VG1029110070
26	Turbo charger	VG1034110071
26	Turbo charger	VG1540110006
26	Turbo charger	VG1027110081
26	Turbo charger	VG1029110081
26	Turbo charger	VG1034110081
26	Turbo charger	VG1034110061
27	Gasket	VG1560110210
27	Gasket	VG1500119011
27	Gasket	VG1540110017
28	Hose	VG1560070002A
28	Hose	VG1560070004A
28	Hose	VG1092110024
28	Hose	VG1560070013
28	Hose	VG1500079015
28	Hose	VG1540110013A

28	Hose	VG1500079022
28	Hose	VG1500119023
29	Bush	90003559563
30	Nut	90003559513
31	Flange	VG1560110152
32	Gasket	VG609E110050
33	Bolt	90003862428
34	Retaining ring	VG188250083
35	Oil return tube assembly	VG1560079003
35	Oil return tube assembly	VG1560079006
35	Oil return tube assembly	VG1540110205
35	Oil return tube assembly	VG1560070040
35	Oil return tube assembly	VG1560079361
35	Oil return tube assembly	VG1560070046
35	Oil return tube assembly	VG1560079024
38	Gasket	VG2600110048
39	Bolt	VG1460070014
40	Hose	VG2600070071
40	Hose	VG1460070017
41	Hose clamp	90003989301
41	Hose clamp	90003989340
42	Connecting pipe	VG1800110045
42	Connecting pipe	VG1560110165
43	Clamp	VG1560110226
44	O-ring	VG190320035
48	Hose	VG1047110103
48	Hose	VG2600110824
49	Hose clamp	VG9003980003
49	Hose clamp	VG9003980002
50	Support	VG1540110016A
51	Nut	M8 DIN929
52	Compressor outlet pipe	VG1500119008
52	Compressor outlet pipe	VG1540110027A
52	Compressor outlet pipe	VG1087110001
52	Compressor outlet pipe	VG1069110001
52	Compressor outlet pipe	VG1047110104
52	Compressor outlet pipe	VG1047110100
52	Compressor outlet pipe	VG1500119051

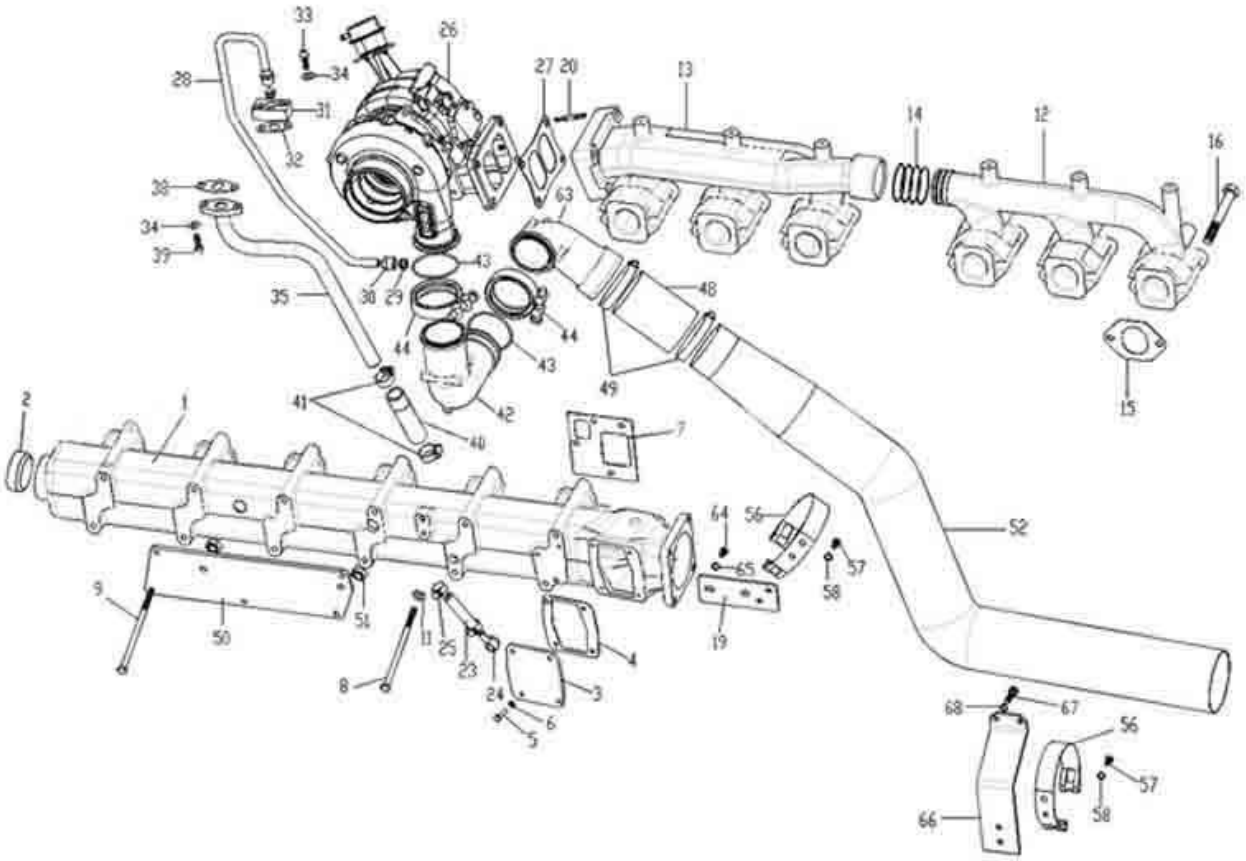

AIR INLET & EXHAUST 2#		
WD615 EURO-III ENGINE PARTS CATALOGS		
Serial	Name	Part Number
56	Hose clamp	VG1560110021
56	Hose clamp	VG1560110029
57	Bolt	90003802419
58	Spring washer	90003932023
59	Clamping pin	VG209190017
60	Clamping pin	VG1700550013
61	Bolt	AZ90003862462
62	Support	VG1540110053C
63	Connecting pipe	VG2600111078
63	Connecting pipe	VG1500119016
63	Connecting pipe	VG2600111141
64	Bolt	90003802411
65	Spring washer	90003932023

66	Support	VG1047110102
66	Support	VG1047110105
67	Bolt	90003802415
68	Spring washer	90003932023
70	Insulation cover	VG2600111144
70	Insulation cover	VG2600111142
71	Insulation cover	VG2600111145
71	Insulation cover	VG2600111143
71	Insulation cover	VG2600111146
72	Washer	90003936109
73	Bolt	VG260110962
74	Support	VG1096119055
75	Connecting pipe	VG1500119020
75	Connecting pipe	VG1500119061
76	Stud	VG1560110187
77	Nut	190003888470
78	Cover	VG1092110031
79	Connecting pipe	VG1540110023
80	Gasket	VG1560110180

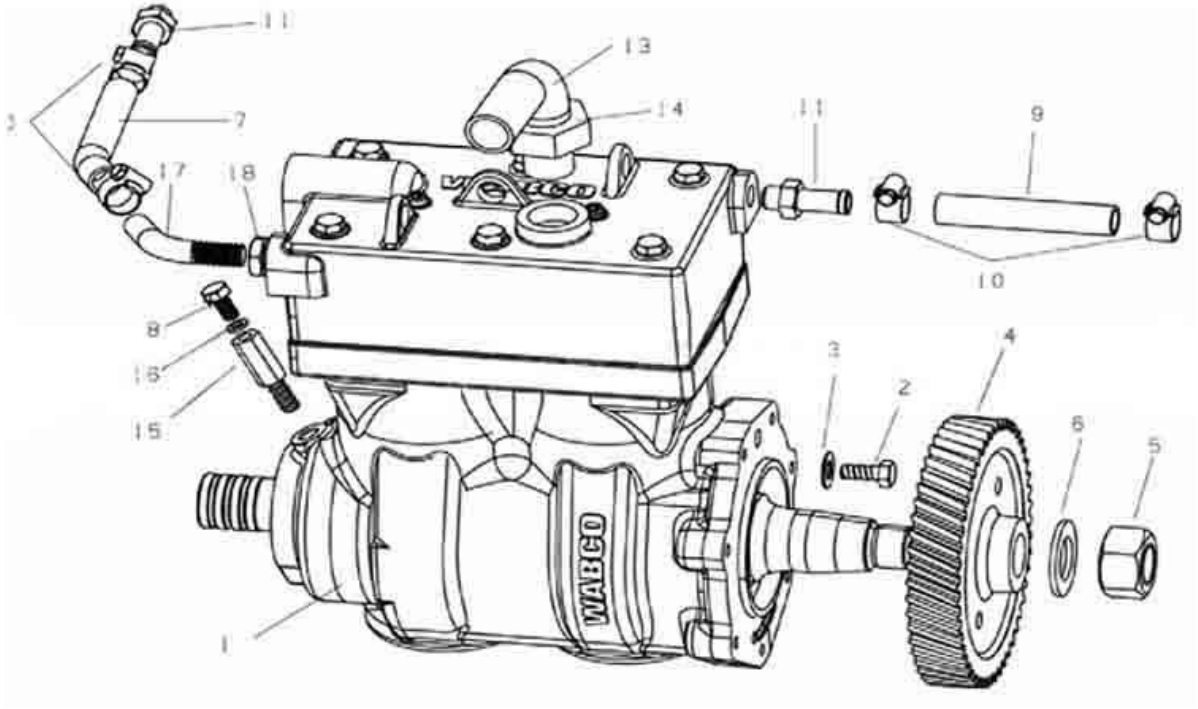

AIR COMPRESSOR		
WD615 EURO-III ENGINE PARTS CATALOGS		
Serial	Name	Part Number
1	Water cooling air compressor	VG1099130010
2	Bolt	Q150B0820TF2
3	Spring washer	90003932023
4	Gear	VG1560130064
5	Nut	VG2600130045
6	Joint	VG409020045
7	Hose	VG1092060010
8	Bolt	VG2600130053
9	Hose	VG1560060019
10	Hose clamp	90003989336
11	Water pipe connector	VG2600130026
13	Intake pipe connector	VG1560130035
14	Nut	90003559778
15	Transition joint	VG1560070051
16	Washer	VG9003080003
17	Water inlet connector	VG1560060012
18	Nut	Q351B14

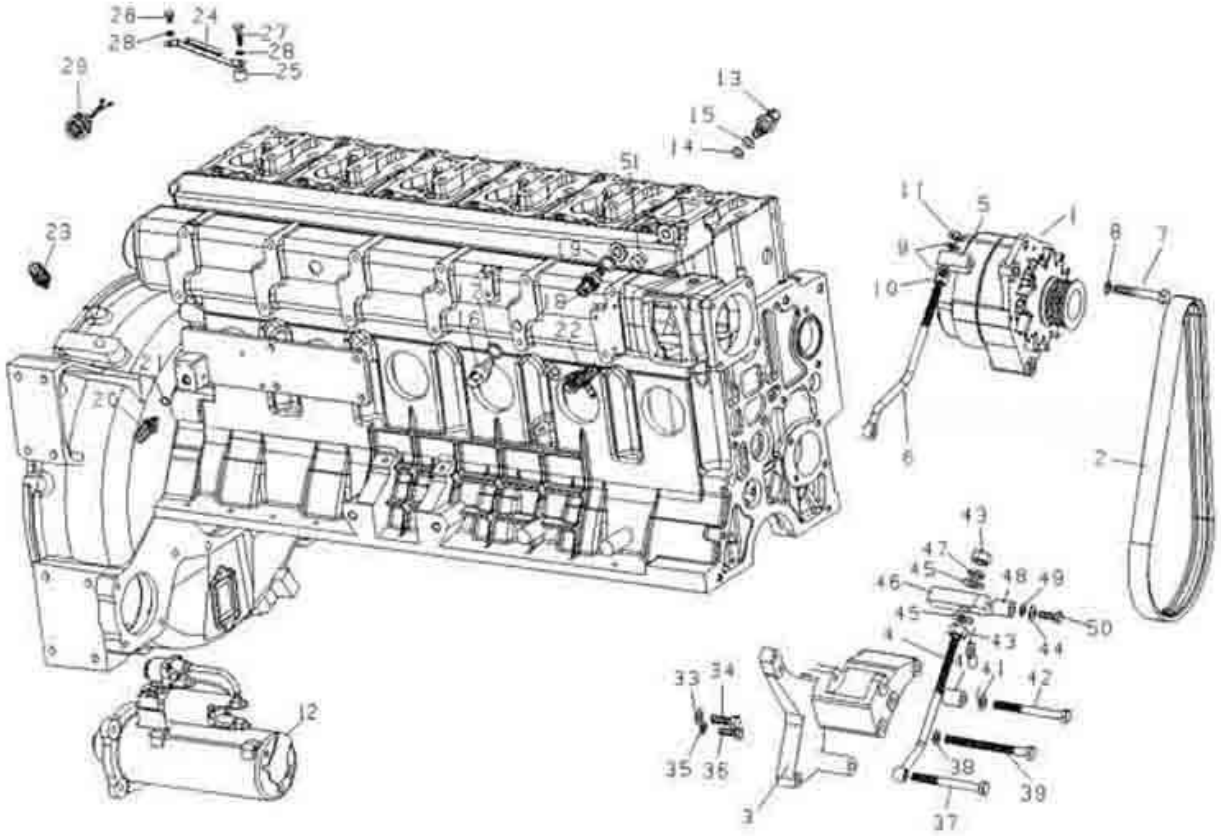

ELECTRONIC 1#		
WD615 EURO-III ENGINE PARTS CATALOGS		
Serial	Name	Part Number
1	Alternator	VG1560090011
2	Ribbed belt	VG1500090066
3	Air-condition bracket	VG1500130018
4	Bolt	VG1500090026
5	Distance piece	VG1500090027
6	Bolt	VG1500090018
7	Bolt	90003800564
8	Spring washer	90003932025
9	Washer	90003935125
10	Nut	90003871305
11	Nut	90003888452
12	Starter	VG1560090001
12	Starter	VG1560090007
13	Pressure sensor	VG1092090311

13	Pressure sensor	VG1500090060
14	Washer	VG2600080275
15	Washer	90003930261
16	Temperature sensor	R61540090003
17	Sealing washer	Q72316T3M
18	Coolant temp. sensor	R61540090004
19	Washer	Q72316T3M
20	Fuel temp. sensor	R61540090005
21	Sealing washer	R61540090006
22	Pressure sensor	R61540090007
23	Crankshaft speed sensor	R61540090008
24	Clamp	VG1099090033
25	Bolt bush	VG1099090034A
26	Bolt	90003802307
27	Bolt	Q150B0640
28	Spring washer	90014350003
29	Wiring harness	VG1099090004
32	Supporting	VG1540090091A
33	Washer	90003930271
34	Bolt	90003802527
35	Washer	90014040007
36	Bolt	90003802424
37	Bolt	90003800568
38	Washer	90014070002
39	Bolt	90003800575
40	Bush	VG1500130019
41	Spring washer	90003932025
42	Bolt	90003800568
43	Nut	90012630006
44	Spring washer	90003932023
45	Washer	90003935015
46	Spacer block	VG1500130027
47	Spring washer	90003931162
48	Bush	VG581C60018
49	Washer	90003932309
50	Bolt	90003802424
51	Coolant temp. sensor	VG1500090061
51	Plug	190003962020
52	Cover	VG2600090318

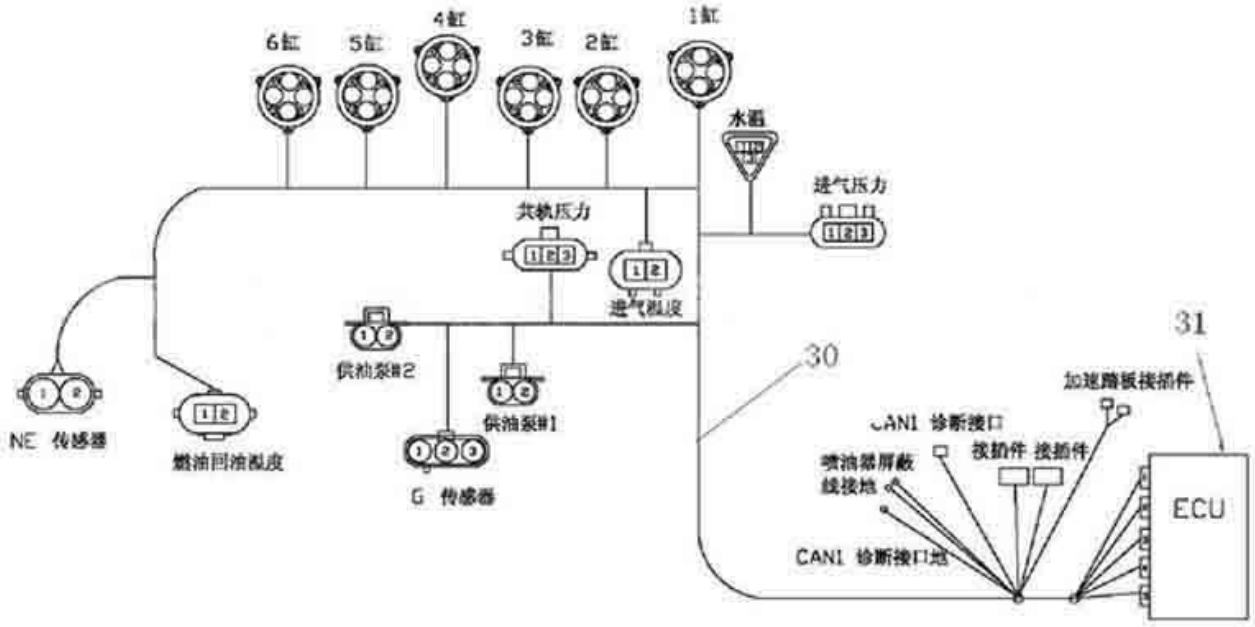

ELECTRONIC 2#		
WD615 EURO-III ENGINE PARTS CATALOGS		
Serial	Name	Part Number
30	ECU assembly	R61540090002
31	Wiring harness	VG1095090009
31	Wiring harness	VG1096090009
31	Wiring harness	VG1093090009
31	Wiring harness	VG1093090901
31	Wiring harness	VG1093090904

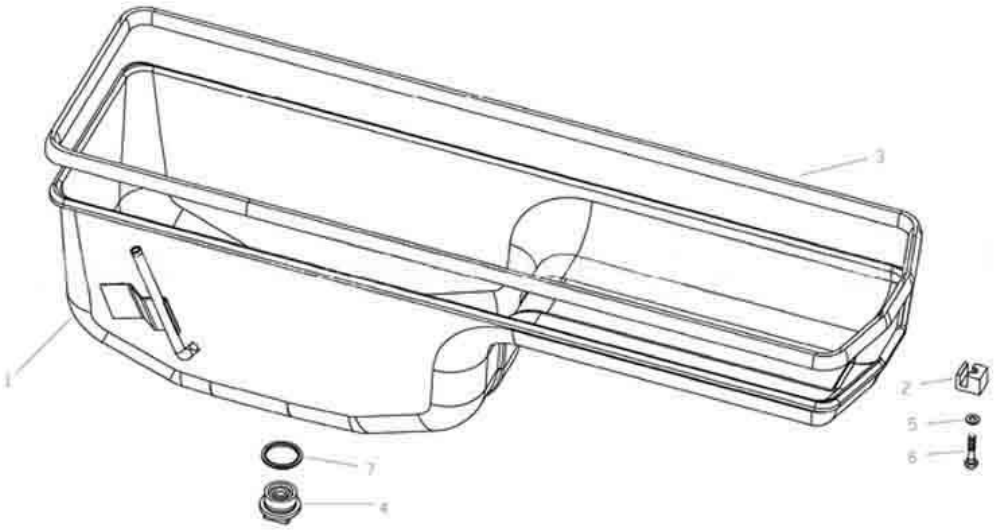

OIL PAN		
WD615 EURO-III ENGINE PARTS CATALOGS		
Serial	Name	Part Number
1	Oil pan	VG1800150015A
1	Oil pan	VG1540150002A
1	Oil pan	VG1540150010
2	Holding piece	VG14150046
3	Joint	VG14150004
4	Plug	VG2600150108
5	Washer	90003930261
6	Bolt	90003802442
7	Washer	VG2600150106
31	Wiring harness	VG1034090100

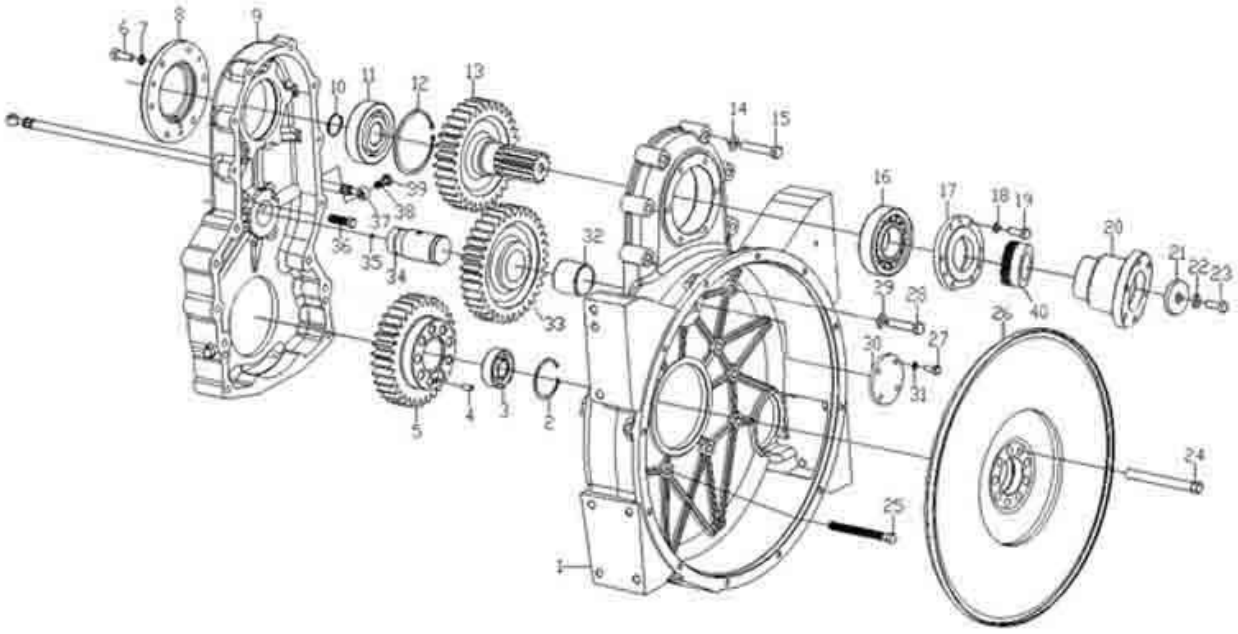

PTO		
WD615 EURO-III ENGINE PARTS CATALOGS		
Serial	Name	Part Number
1	Flywheel housing	AZ1500019035
2	Retaining ring	190003934310
3	Bearing	190003311416
4	Dowel	190003901418
5	Crankshaft gear	VG1500019014
6	Hex head bolt	190003802527
7	Spring lockwasher	190003931122
8	Bearing cover	VG1500019024
9	Power take-off housing	AZ1500019031
10	Retaining ring	190003933251
11	Roller bearing	AZ9003320122
12	Retaining ring	190014570001
13	Gear	VG1500019015A
14	Wave spring washer	190003932016
15	Hex head bolt	190011350066

16	Roller bearing	AZ9003320120
17	Oil seal carrier	VG1500019023A
18	Spring lockwasher	190003931122
19	Hex head bolt	190003802527
20	Flange	VG1500019025A
21	Clamp	VG1500019026
22	Spring lockwasher	190003931162
23	Hex head bolt	190011270032
24	Hex head bolt	VG1500029046
25	Bolt	VG1500019027
25	Bolt	VG1500019011
26	Flywheel	AZ1500029041
26	Flywheel	AZ1500029023
27	Hex head bolt	190003802419
28	Hex head bolt	190011350058
29	Wave spring washer	190003932016
30	Idler gear shaft cover	VG1500019022
31	Spring lockwasher	190003931102
31	Wiring harness	VG1093090902
32	Bush	VG1500019017
33	Idler gear	VG1500019016
34	Idler gear shaft	VG1500019033
35	Plug	VG1500019034
36	Bolt	VG1500019028
36	Bolt	VG1500019012
37	Oil pipe	VG1500019029
38	Sealing washer	VG9003080003
39	Hollow bolt	190003962607
40	Bush	VG1500019040