SINOTRUK

MC07 ENGINE

SPARE PARTS CATALOG

PART -I

https://www.sinosoon.com Email:market@sinosoon.com

INDEX

Time case	Page 4
Intermediate Gear and Oil Pump	Page 6
Power Take-off	Page 7
Piston and connecting Rod	Page 8
Cylinder Head	Page 10
Valve Train	Page 11
Rocker Gear	Page 12
Crankcase	Page 13
Oil Sprayer Nozzle	Page 15
Electric system	Page 16
Single Cylinder Air Compressor	Page 18
Turbocharger	Page 20
Thermostat	Page 22
Crankshaft and Flywheel	Page 23
Intake System	Page 24
Oil filter and Oil cooler	Page 26
Oil Pump	Page 27
Oil Sump	Page 28
Fan	Page 30
Fuel transport system	Page 31
Exhaust Manifold and Lifting Eye	Page 33
Camshaft	Page 35
Fuel feed system	Page 36
Flywheel Housing	Page 38

Connector Parts for Single Cylinder Air Compressor	Page 39
Connector Parts for Single Cylinder Air Compressor	Page 40

正时齿轮室　Timing Case

(销售组：080-#0010-0909、080-#0380-0757)

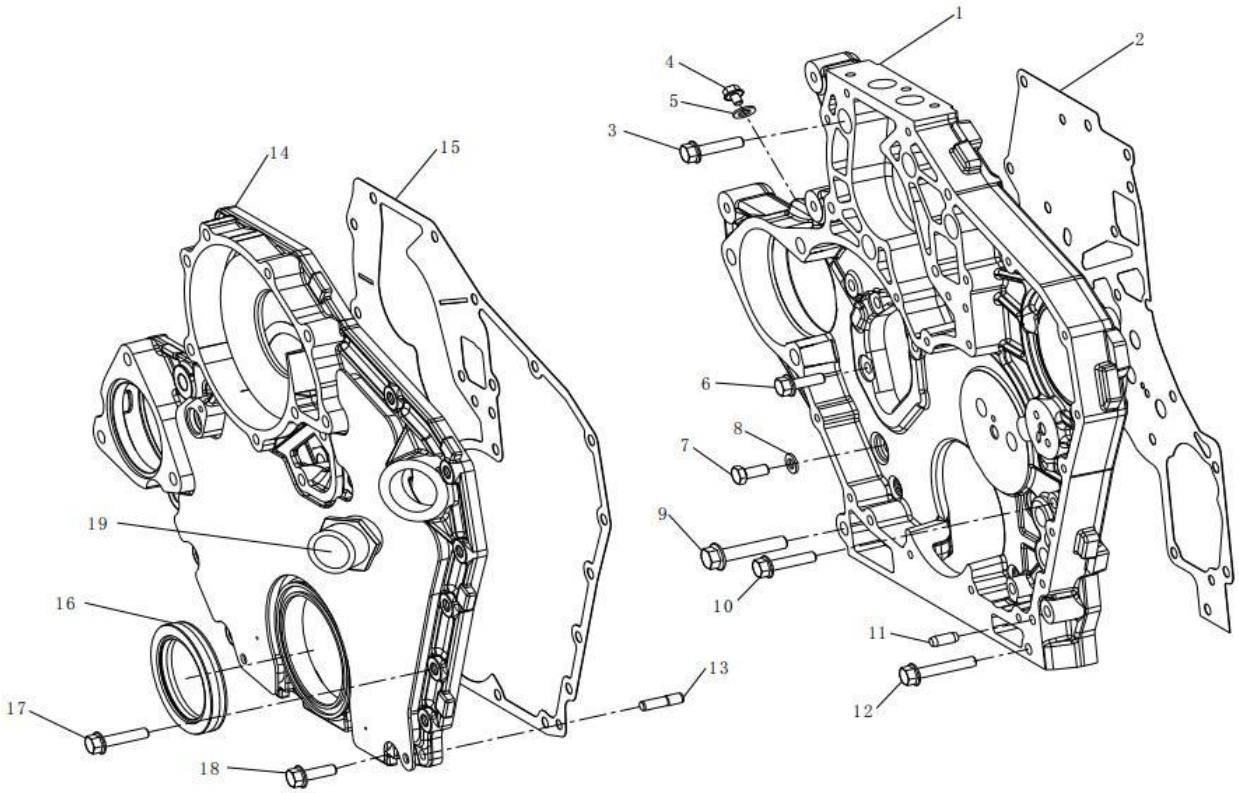

序号 No.	图号 Part No.	单车用量 Qty	Part Name
1	080V01304-0066	1	Timing case
2	080V01903-0333	1	Timing case gasket
3	MQ6-03216-8307	4	Hex bolt
4	MQ6-03219-0019	1	Hex bolt
5	MQ6-56631-0101	1	Sealing ring
6	MQ6-03216-8305	4	Hex bolt
7	MQ6-01284-7112	2	Hex bolt

8	MQ6-15013-0411	2	Washer
9	MQ6-03216-8410	1	Hex bolt
10	MQ6-03216-8307	2	Hex bolt
11	MQ6-22220-1208	2	Spring pin
12	MQ6-03216-8309	2	Hex bolt
13	080V91301-0086	2	Centering pin
14	080V01305-5144	1	Timing cover
15	080V01903-0322	1	Timing cover gasket
16	080V01510-0280	1	Radial shaft seal gasket
17	MQ6-03216-8307	6	Hex bolt
18	MQ6-03216-8305	3	Hex bolt
19	200V01810-0043	1	Oil Filler Pipe

中间齿轮和机油泵齿轮 Intermediate Gear and Oil Pump Gear

(销售组：080-#0010-0909、080-#0130-0750)

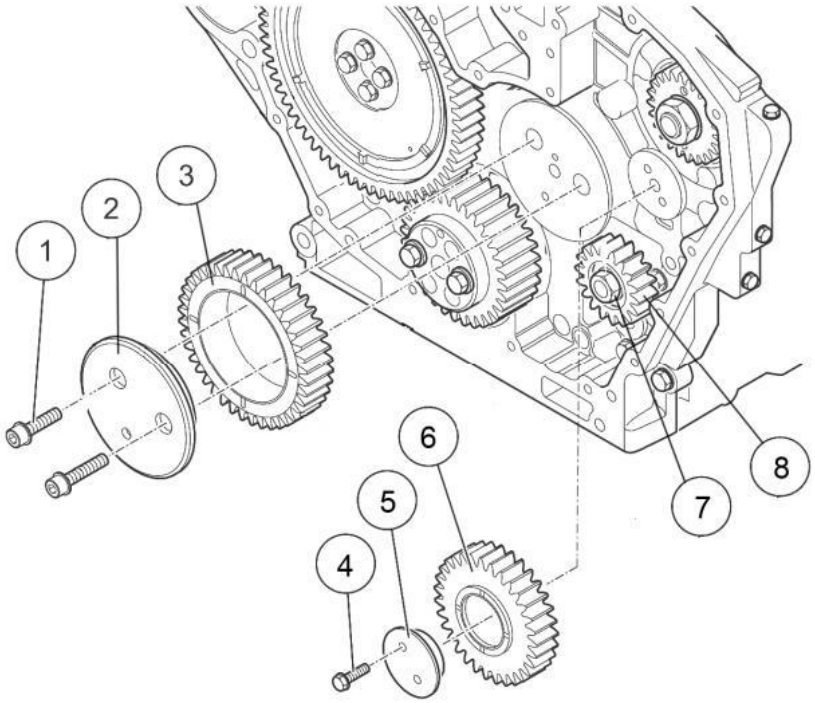

序号 No.	图号 Part No.	单车用量 Qty	Part Name
1	MQ6-02191-0614	2	Cylinder Screw
2	080V04506-0090	1	Output shaft
3	080V04505-5118	1	Intermediate Gear 1
4	MQ6-01283-7119	2	Hex Bolt
5	080V11302-0051	1	Gear Stud
6	080V04505-5119	1	Intermediate Gear 2
7	MQ6-11204-0103	1	Hex Nut
	MQ6-16044-0212	1	Spring Washer
8	080V05201-0083	1	Oil Pump Gear

辅助输出　Power Take-off

(销售组：080-#0010-0909)

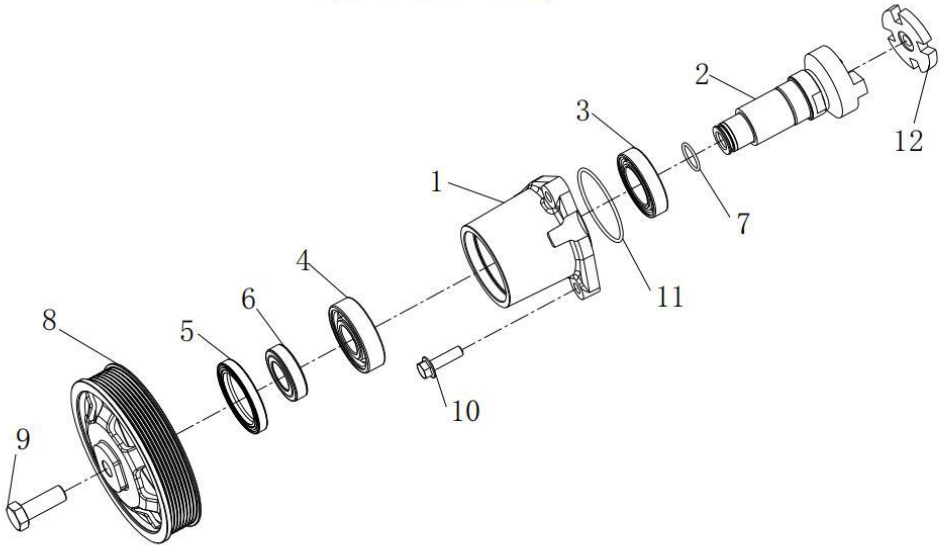

No.	Part No.	Qty	Part Name
1	080V38507-0070	1	Gear carrier
2	080V38517-0060	1	Output shaft
3	MQ6- 1410-4803	1	Ball bearing
4	MQ6-31420-3803	1	Ball bearing
5	080V01510-0267	1	Radial shaft seal
6	080V93020-0384	1	Race
7	MQ6-56936-1300	1	O-RING
8	080V95820-0104	1	Pulley
9	MQ6-01783-8514	1	Hex bolt
10	MQ6-03215-8407	3	Hex bolt
11	MQ6-56936-2709	1	O-RING
12	080V47104-0040	1	Carrier Plate

活塞连杆部分 Piston and connecting Rod

(销售组：080-#0010-0909)

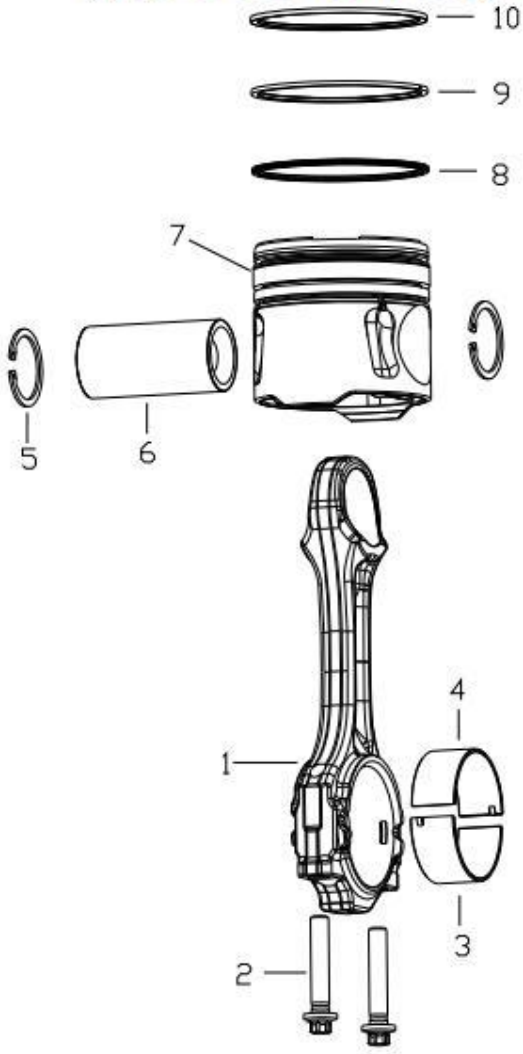

序号 No.	图号 Part No.	单车用量 Qty	Part Name
1	080-02400-6045	6	Connecting rod
2	080V90490-0028	12	Screw

3	081V02410-0693	6	Bushing（Lower)
4	081V02410-0692	6	Bushing（Upper）
5	MQ6-29029-0205	12	Piston pin retaining ring
6	080V02502-0129	6	Piston pin
7	080V02511-0721	6	Piston
8	080V02503-0838	6	Spiral spring oil ring
9	080V02503-0814	6	Taper face compression ring
10	080V02503-0813	6	Keystone ring

气缸盖　Cylinder Head

(销售组：080-#0010-0909)

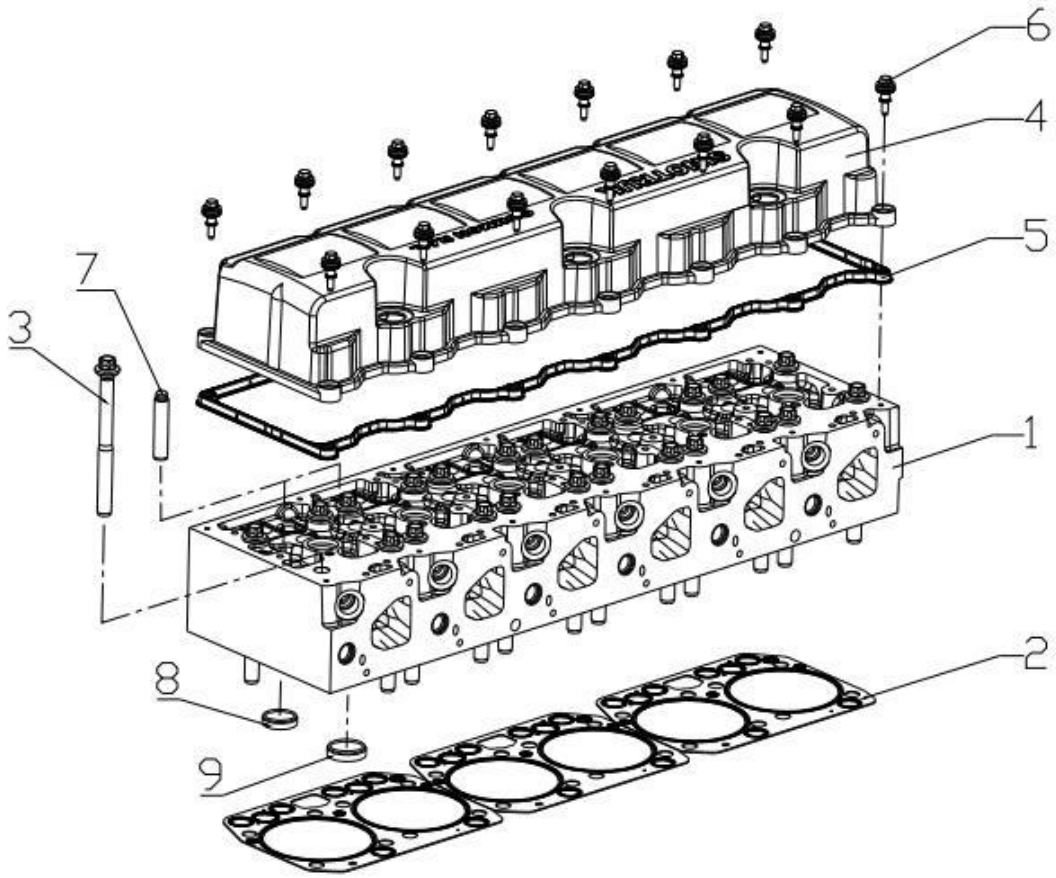

No.	Part No.	Qty	Part Name
1	080-03100-6273	1	Cylinder head assembly
2	080V03901-0378	3	Cylinder head gasket
3	080V90020-0383	24	Cylinder head bolt
4	080V03400-6007	1	Cylinder head cover
5	080V03905-0167	1	Cylinder head cover gasket
6	080V96210-0078	14	Damping element
7	081V03201-1138	24	Valve Guide
8	081V03203-0409	12	Exhaust Valve Seat
9	081V03203-0382	12	Intake Valve Seat

气门机构　Valve Train

(销售组：080-#0010-0909)

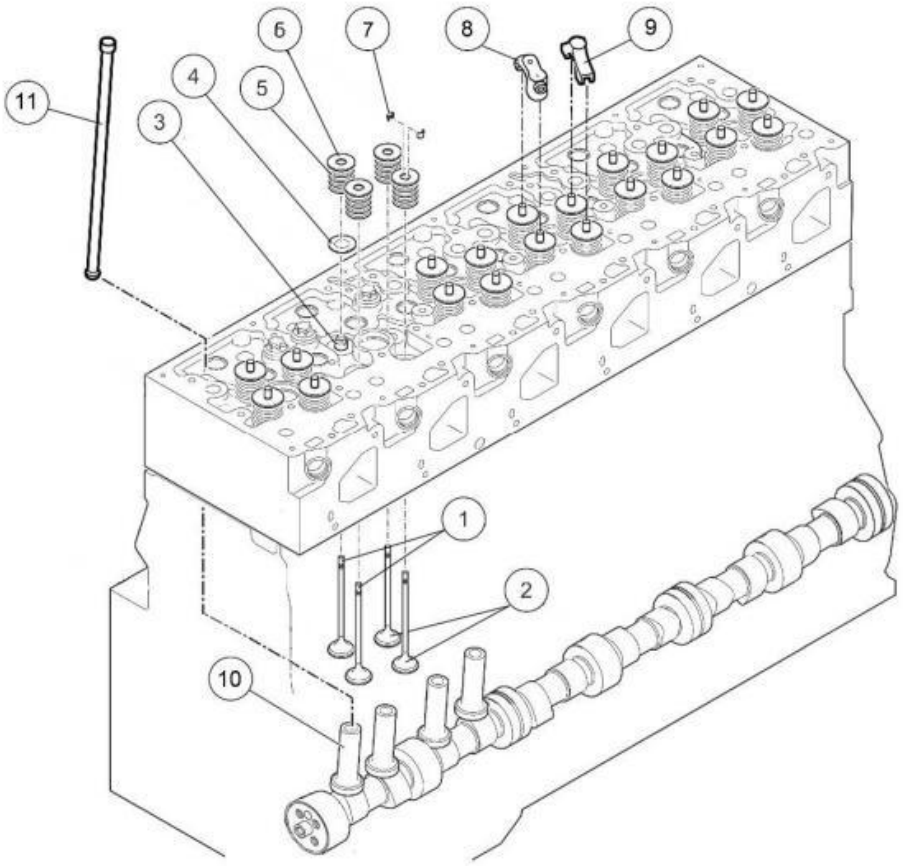

序号 No.	图号 Part No.	单车用量 Qty	Part Name
1	080V04101-0538	12	Exhaust valve
2	080V04101-0537	12	Intake valve
3	080V04902-0034	24	Valve guide bush
4	080V90701-0236	24	Valve spring washer
5	080V04102-0155	24	Valve spring
6	080V04103-0109	24	Valve spring cup
7	080V04104-0032	48	Valve cone
8	080V04120-6007	6	Valve bridge (outlet)
9	080V04120-0023	6	Valve bridge (inlet)
10	081V04301-0121	12	Push rod
11	081V04302-0062	12	Push rod assembly

摇臂装置总成　Rocker Gear

(销售组：080-#0010-0909)

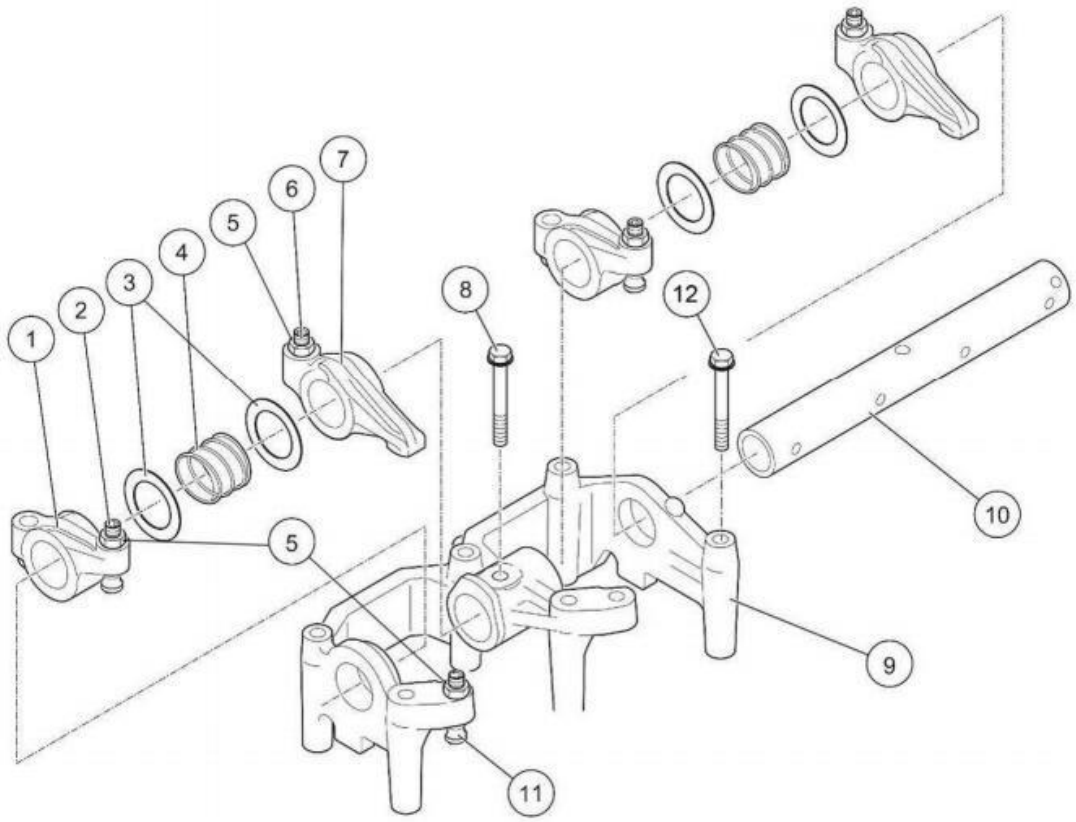

No.	Part No.	Qty	Part Name
1	080V04200-6023	6	Rocker arm (exhaust)
2	200V04205-5009	6	Adjusting bolt
3	080V90701-0237	12	Washer
4	080V97601-0300	6	Pressure spring
5	200V90501-0030	18	Screw
6	080V04205-0051	6	Adjusting bolt
7	080V04200-6022	6	Rocker arm (intake)
8	MQ6-01013-9115	3	Hexagon head bolt
9	080V04202-0165	3	Support for rocker arm work
10	080V04203-5064	3	Rocker arm shaft
11	080V04205-0049	6	Adjusting bolt
12	MQ6-03215-6332	18	Hexagon head bolt

曲轴箱 Crankcase

(销售组：080-#0030-0347)

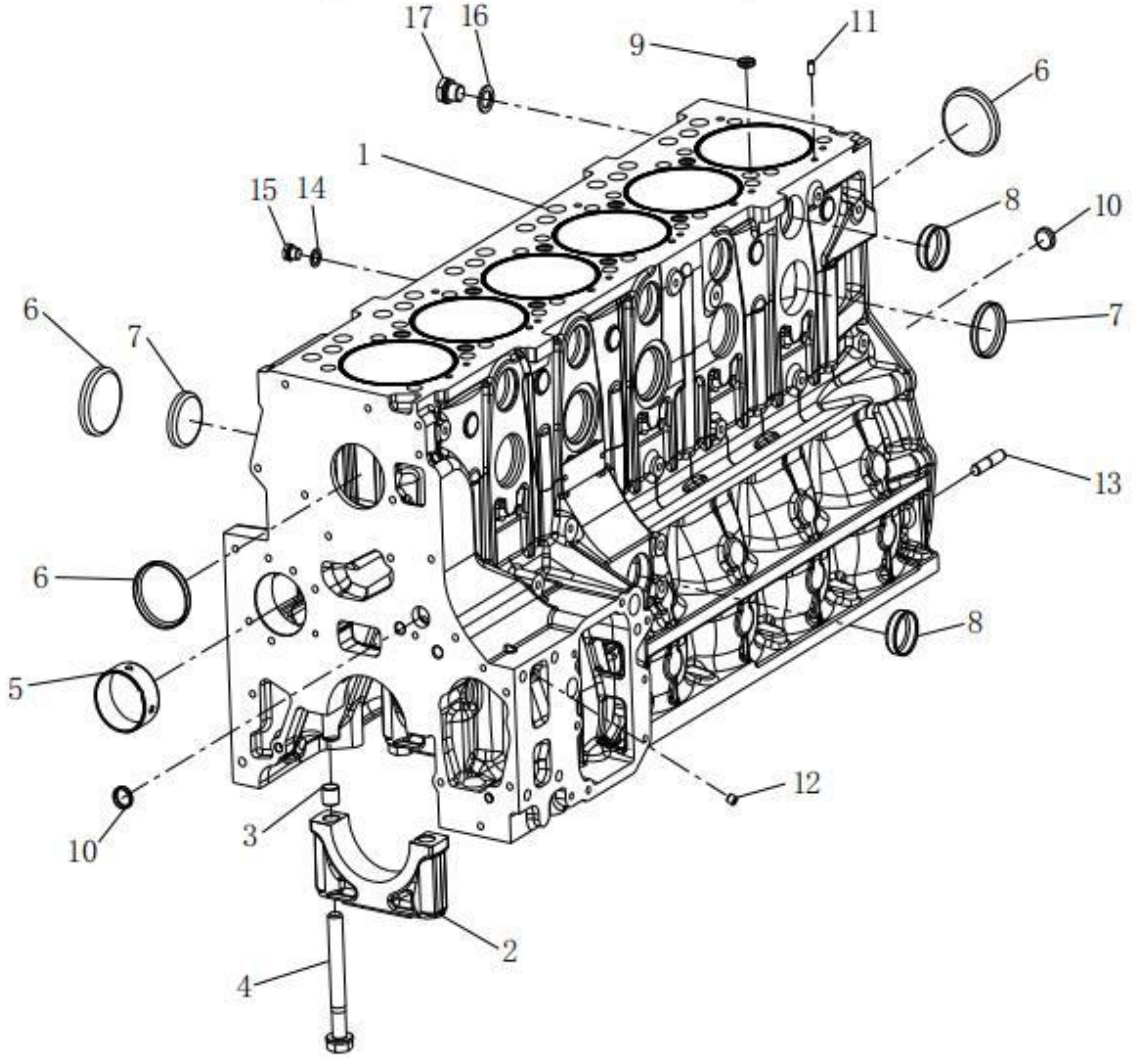

No.	Part No.	Qty	Part Name
1	080-01101-0723	1	Crankcase
2	080V01105-1205	6	Bearing cap
	080V01105-1204	1	Bearing cap
3	080V91730-0049	14	Sleeve
4	080V90020-0352	14	Hex collar bolt
5	081V04410-1034	4	Camshaft bush
	081V04410-1038	1	Camshaft bush

6	080V91606-0100	8	Cover
7	080V91606-0091	11	Cover
8	200V91606-0090	8	Cover
9	MQ6-15094-4109	10	Cover
10	MQ6-15094-4113	2	Cover
11	080V91301-0083	6	Pin
12	MQ6-21649-0004	1	Cover
13	080V91301-0087	2	Pin
14	MQ6-56631-0104	1	Sealing ring
15	MQ6-08092-2142	1	Screw plug
16	MQ6-56631-0114	2	Sealing ring
17	MQ6-08042-0211	2	Screw plug

机油喷嘴　Oil Sprayer Nozzle

(销售组：080-#0030-0347)

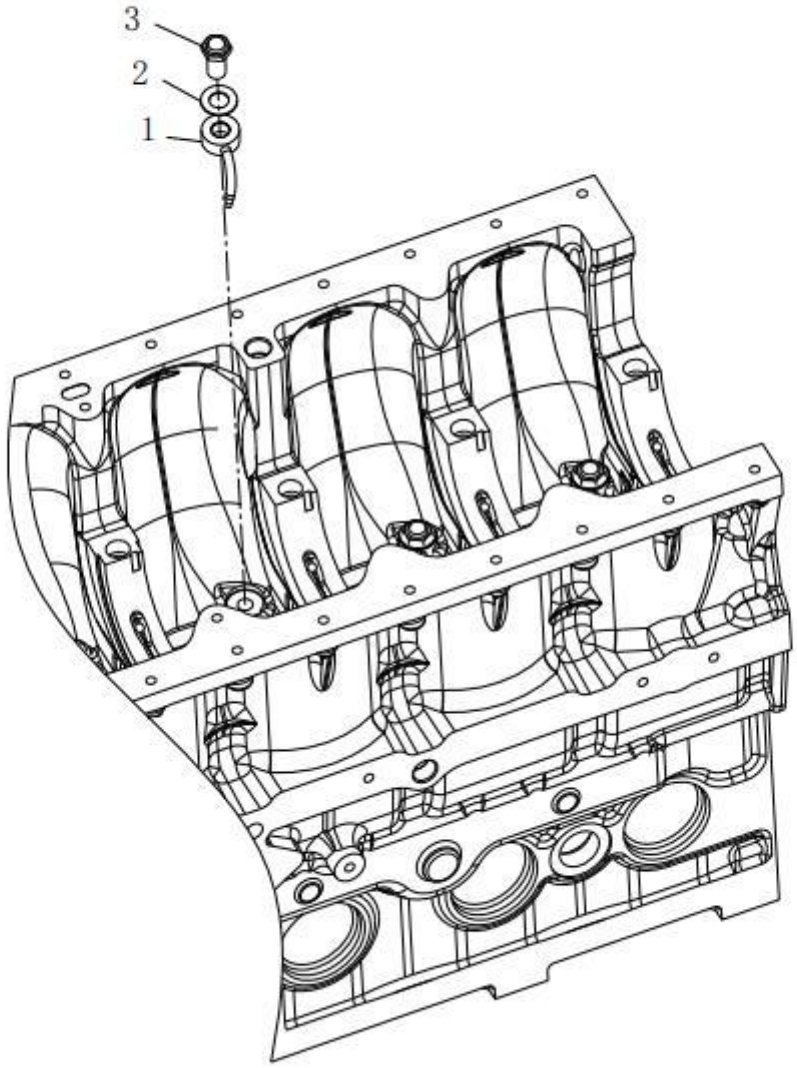

No.	Part No.	Qty	Part Name
1	080V01601-5097	6	Oil sprayer nozzle
2	MQ6-16044-0212	6	Spring washer
3	080V05405-5024	6	Oil pressure valve

电气系统　Electric system

(销售组：080-#0040-0885、080-#0050-0188)

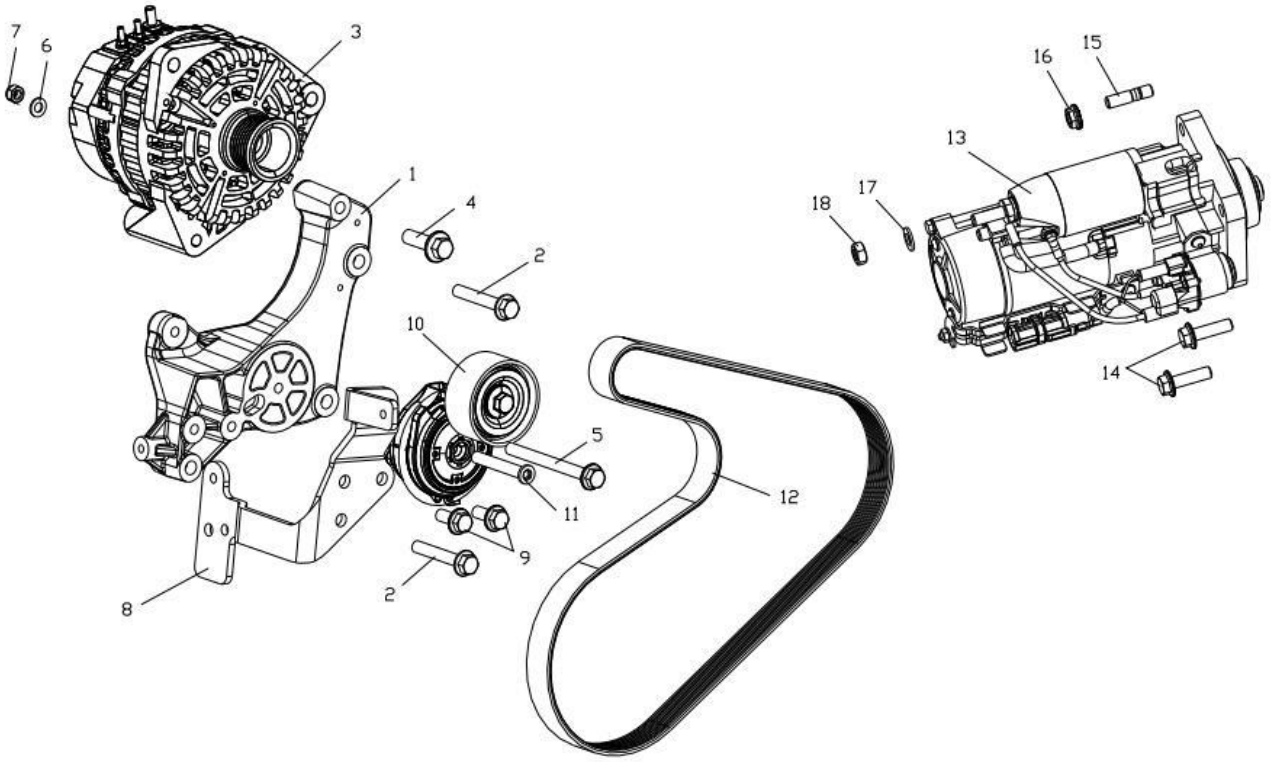

序号 No.	图号 Part No.	单车用量 Qty	Part Name
1	080V19101-0360	1	Bracket for alternator
2	MQ6-03216-8413	3	Hex bolt
3	082V26101-7271	1	Alternator
4	MQ6-03216-8508	1	Hex bolt
5	MQ6-03216-8418	1	Hex bolt
6	MQ6-15013-0911	1	Washer
7	MQ6-11099-0043	1	Nut

8	080V19101-5294	1	Bracket for alternator
9	MQ6-03216-8405	2	Hex bolt
10	080V95800-7479	1	Automatic Tensioner
11	080V90040-0007	1	Countersunk screw
12	080V96820-0243	1	Narrow joined belt
13	080V26201-7236	1	Starter
14	MQ6-03216-8407	2	Hex bolt
15	MQ6-06226-8807	1	Stud
16	MQ6-11251-2001	1	Nut
17	MQ6-15016-0312	1	Washer
18	MQ6-11181-0115	1	Nut

单缸空压机　Single Cylinder Air Compressor

(销售组：080-#0060-0593)

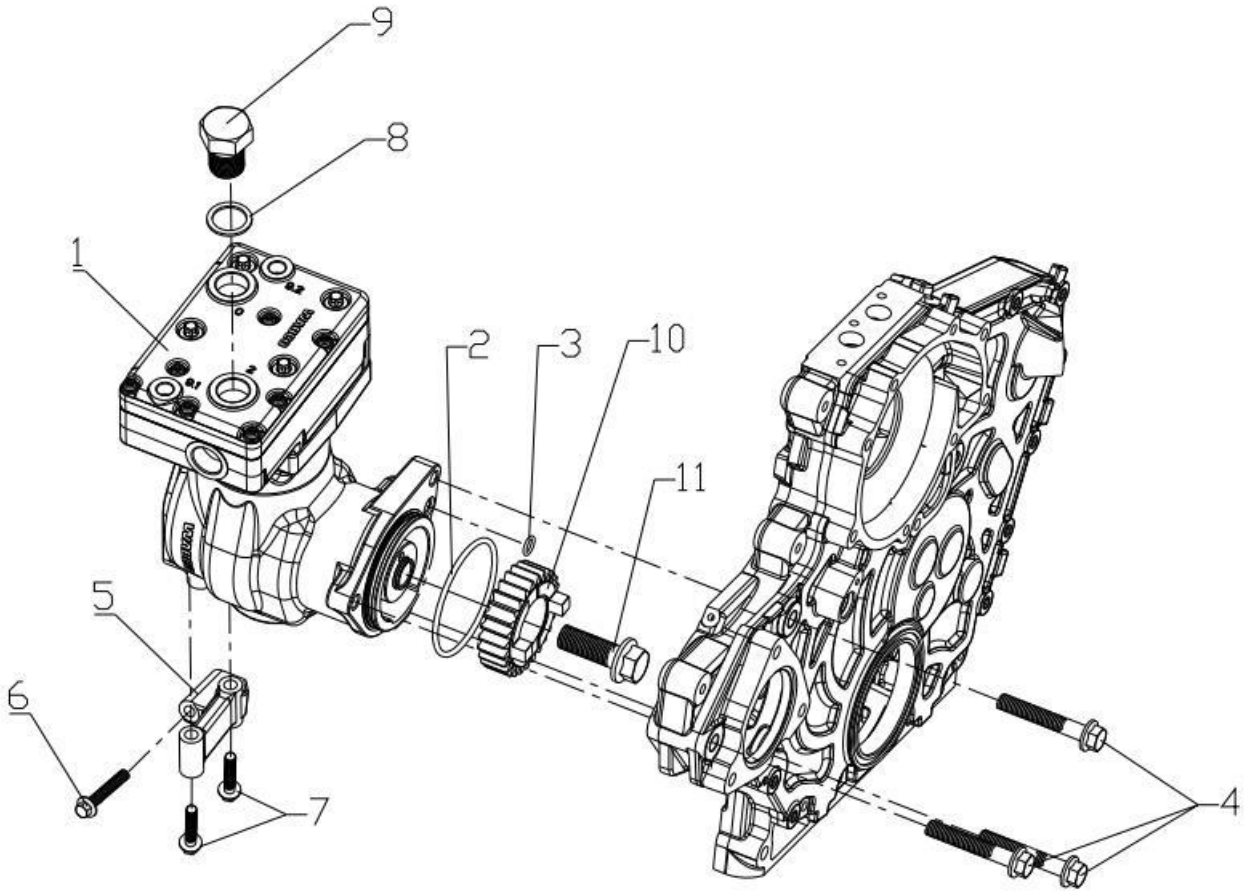

序号 No.	图号 Part No.	单车用量 Qty	Part Name
1	081V54100-7070	1	Single Cylinder Air Compressor
2	MQ6-56936-2969	1	O-Ring
3	MQ6-56938-0522	1	O-Ring
4	MQ6-03216-8531	3	Hexagon head flange bolt
5	080V54302-0101	1	Support Bracket for Air compressor
6	MQ6-03216-8312	1	Hexagon head bolt

7	MQ6-03216-8309	2	Hexagon head bolt
8	MQ6-56333-3256	1	O-Ring
9	082V54100-0071	1	Hexagon head plug
10	080V54210-0205	1	Drive gear for air compressor
11	080V90020-0384	1	Hexagon head bolt

增压器　Turbocharger

(销售组：081-#0070-0531、080-#0300-0369、082-#0450-0247)

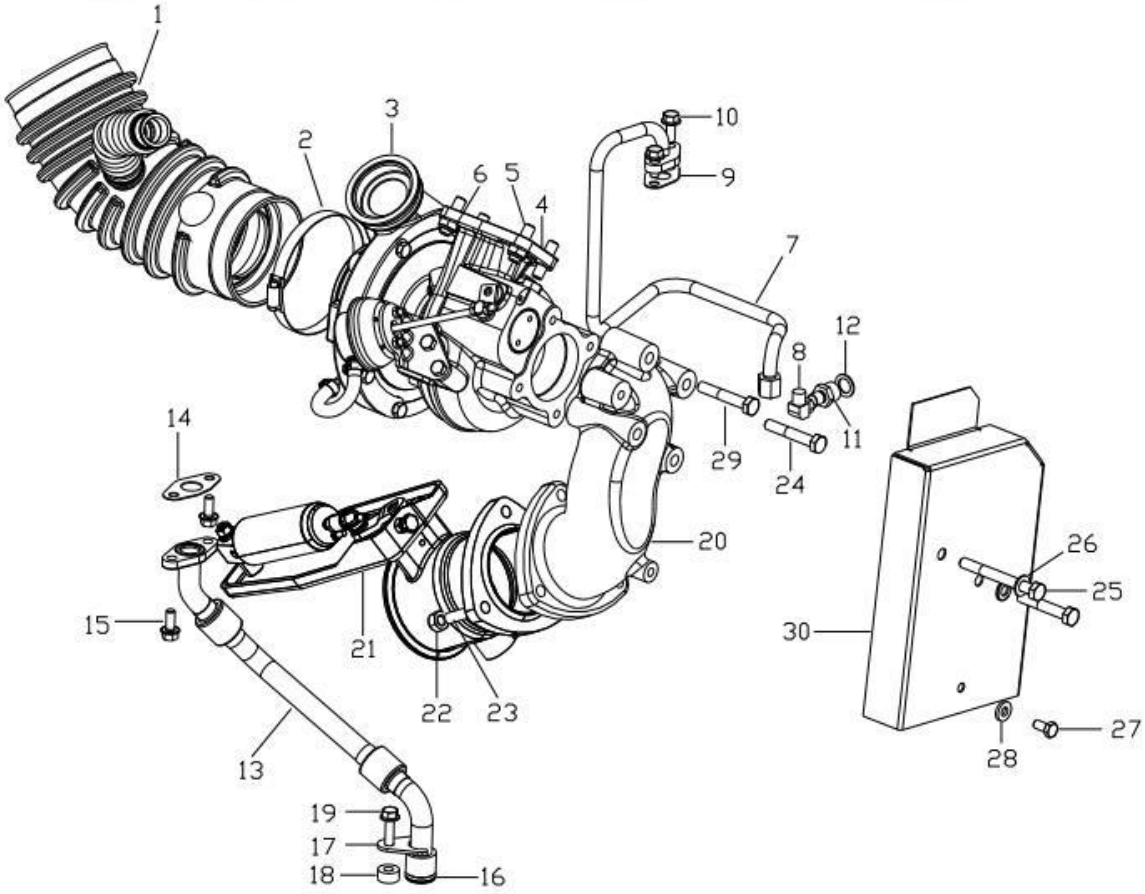

序号 No.	图号 Part No.	单车用量 Qty	Part Name
1	082V09402-0185	1	Air intake adapter
2	MQ6-67129-0022	1	Hose clamp
3	082V09100-7576	1	Turbocharger
4	080V09901-0051	1	Shim
5	080V90201-0251	4	Stud
6	080V90501-0202	4	Nut
7	081V05703-5593	1	Tube

8	MQ6-71230-2104	1	Elbow union
9	080V96601-0577	1	Shim
10	MQ6-03216-8304	2	Hex bolt
11	MQ6-71259-0008	1	Straight union
12	MQ6-56631-0106	1	Sealing ring
13	081V05701-0379	1	Tube
14	080V96601-0576	1	Shim
15	MQ6-03216-8304	2	Hex bolt
16	MQ6-56333-1252	1	Topic seal
17	080V05740-0157	1	Bracket
18	080V91701-0356	1	Washer
19	MQ6-03216-8306	1	Hex bolt
20	081V15201-0111	1	Exhaust elbow
21	082V15600-6134	1	Integrated brake flap
22	MQ6-11241-0106	3	Hexagon nut
23	080V90201-0254	3	Stud
24	082V90001-0129	1	Hex bolt
25	082V90001-0128	2	Hex bolt
26	080V90710-0207	2	Washer
27	MQ6-01289-0266	1	Hex bolt
28	080V90710-0314	1	Washer
29	082V90001-0123	1	Hex bolt
30	081V15215-5011	1	Heal shield

节温器　Thermostat

(销售组：080-#0090-0305、080-#0460-0150、080-#0310-0291)

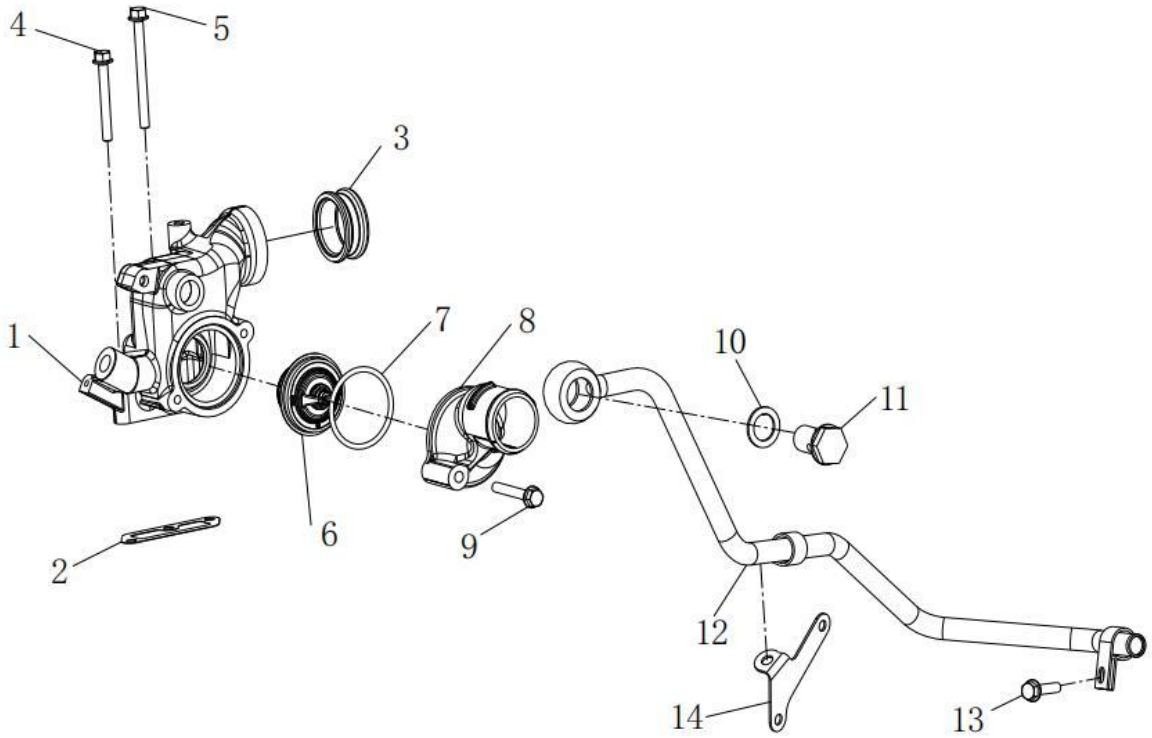

序号 No.	图号 Part No.	单车用量 Qty	Part Name
1	080V06404-0098	1	Thermostat housing
2	080V06904-0044	1	Gasket
3	080V98182-0009	1	Extension tube
4	MQ6-03216-8313	2	Hex bolt
5	MQ6-03216-8316	1	Hex bolt
6	080V06402-0099	1	Thermostat
7	MQ6-56939-0040	1	O-ring
8	080V06405-0041	1	Outlet pipe
9	MQ6-03216-8312	1	Hex bolt
10	MQ6-56631-0110	2	Gasket
11	MQ6-78340-0109	1	Hollow screw
12	080V06303-5863	1	Coolant pipe
13	MQ6-03216-8304	2	Hex bolt
14	080V06340-5111	1	Bracket

曲轴飞轮部分 Crankshaft and Flywheel

(销售组：081-#0100-0783、080-#0190-0501、 080-#0360-0464)

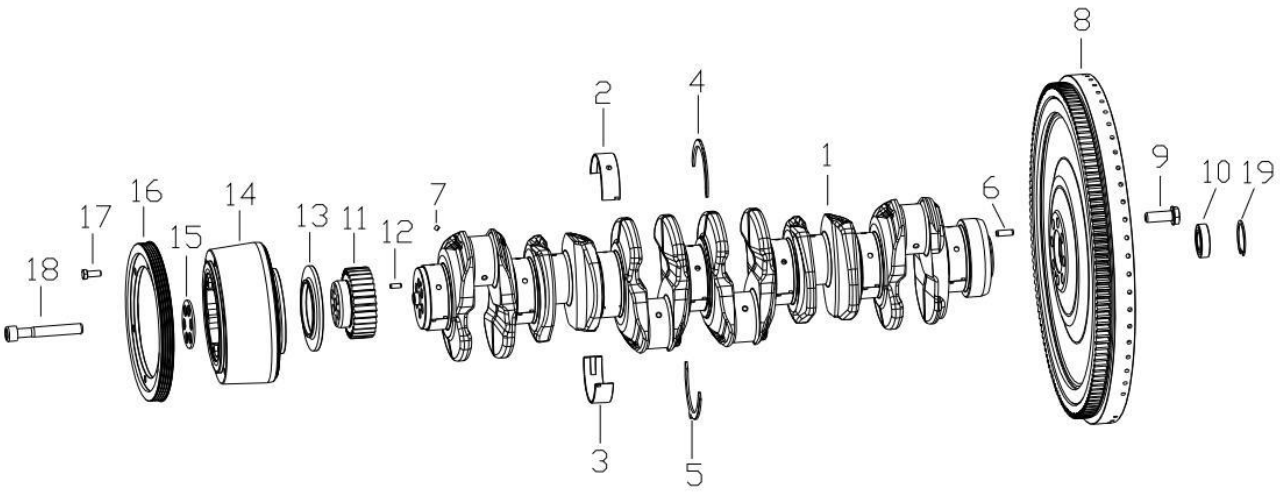

序号 No.	图号 Part No.	单车用量 Qty	Part Name
1	080-02101-0638	1	Crankshaft
2	081V01113-0129	7	Main-bearing(Upper)
3	081V01113-0130	7	Main-bearing(Lower)
4	080V01114-0222	2	Trust washer(Upper)
5	080V01114-0223	2	Trust washer(Lower)
6	MQ6-22220-1212	1	Pin
7	MQ6-21649-0003	6	Jam
8	081-02301-5203	1	Flywheel
9	080V90020-0344	8	Hex collar bolt
10	080V93410-0149	1	Ball bearing
11	080V02115-0251	1	Crankshaft gear
12	MQ6-22120-1008	1	Spring pin
13	080V01505-0169	1	Oil ring
14	080V02201-0158	1	Vibration damper
15	080V02205-0021	1	Shim
16	080V02601-0607	1	Belt pulley
17	MQ6-01283-5113	6	Hex bolt
18	080V90030-0036	6	Cylinder screw
19	MQ6-29020-0128	1	Retaining Ring

进气系统　Intake　System

(销售组：081-#0110-0823)

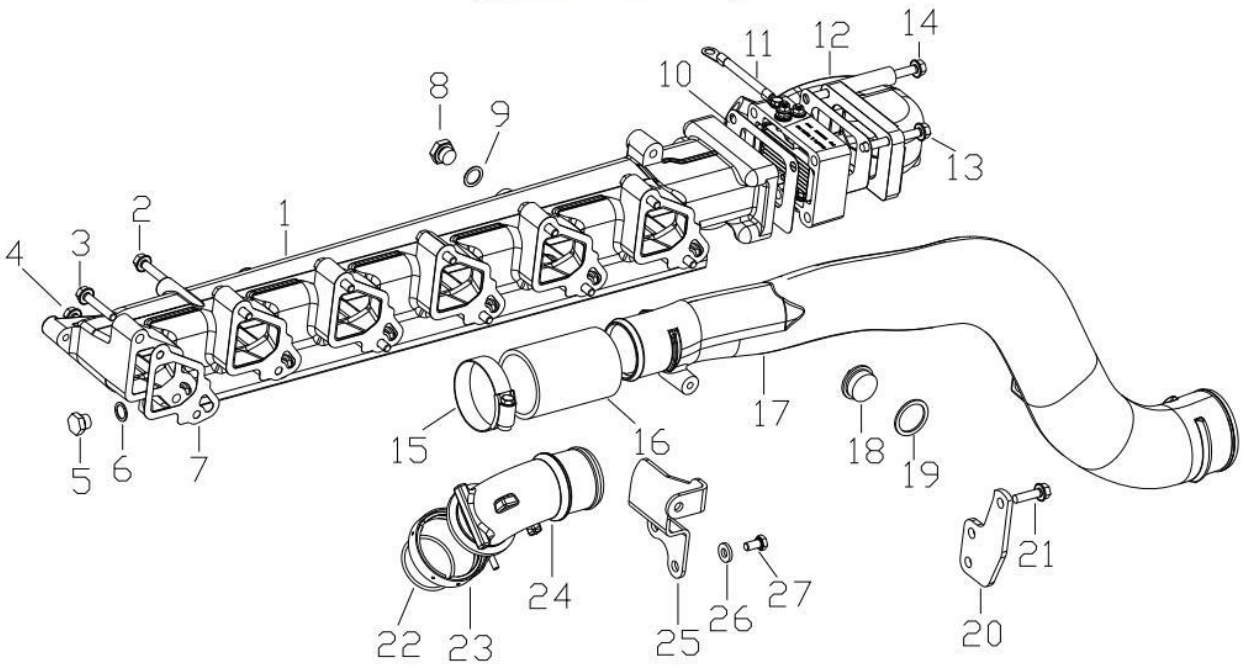

序号 No.	图号 Part No.	单车用量 Qty	Part Name
1	081V08201-0467	1	Intake manifold
2	MQ6-03216-8319	5	Hex bolt
3	MQ6-03216-8309	6	Hex bolt
4	MQ6-03216-8317	1	Hex bolt
5	MQ6-08092-0144	1	Screw plug
6	MQ6-56631-0106	1	Sealing ring
7	081V08902-0212	6	Gasket
8	MQ6-08092-0145	1	Screw plug
9	MQ6-56631-0107	1	Sealing ring
10	082V08902-0203	2	Shim
11	082V08902-0204	1	Intake heating system
11	082V08902-0205	1	intake flange
12	081V09411-0743	1	Intercooler elbow
13	MQ6-03216-8314	1	Bolt
14	MQ6-03216-8320	2	Bolt

15	MQ6-67129-0021	1	Hose clamp
16	080V96301-0108	1	Hose
17	081V09411-0916	1	Charge air-pipe
18	MQ6-08042-0211	1	Screw plug
19	MQ6-56631-0114		Sealing ring
20	081V09440-0165	1	Braket
21	MQ6-03216-8408	1	Hex bolt
22	MQ6-56343-1313	1	Rund
23	080V97445-0052	1	Clip
24	081V09411-0647	1	Tube
25	081V09440-0127	1	Braket
26	MQ6-15013-0411	2	Washer
27	MQ6-01289-0272	2	Hex bolt

机油模块　Oilfilter and Oilcooler

(销售组：080-#0120-0328)

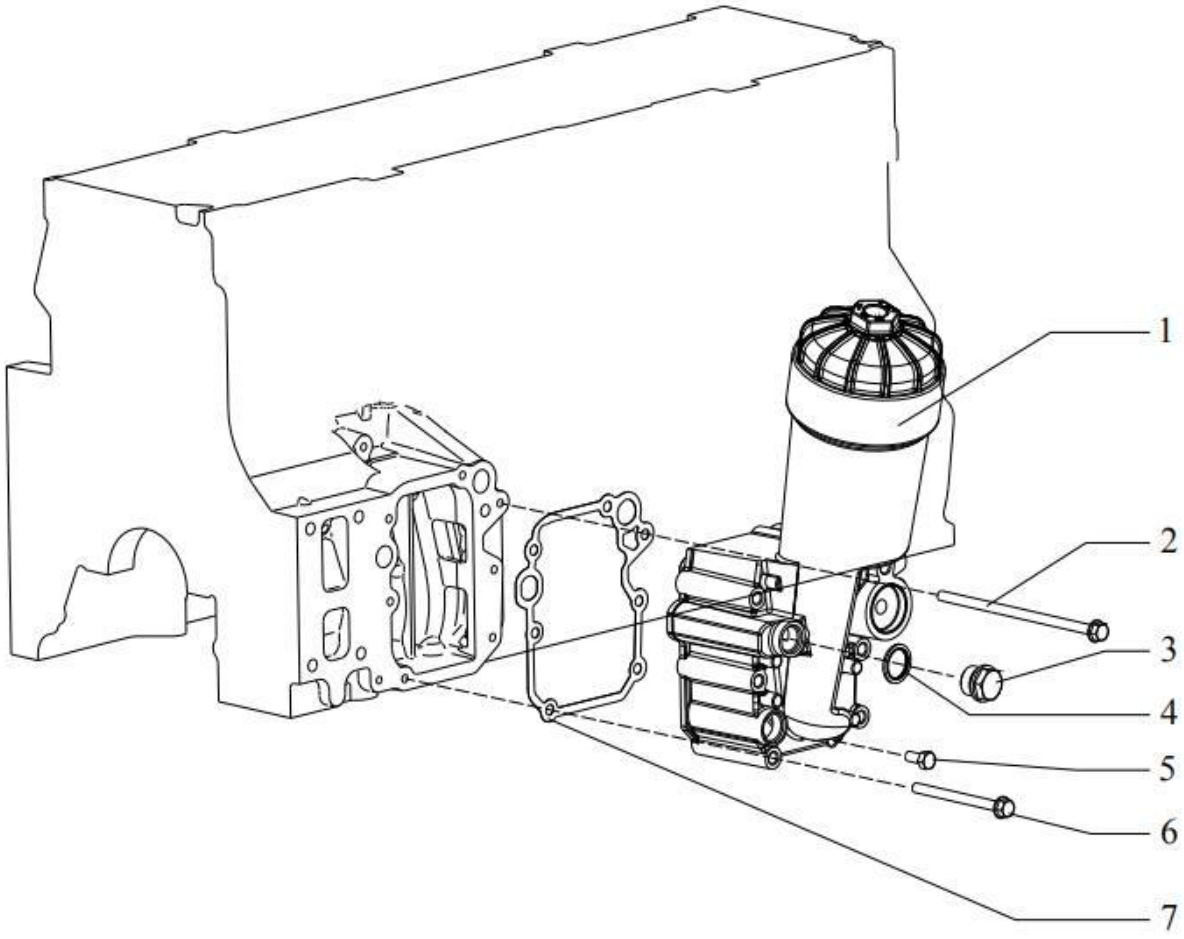

序号 No.	图号 Part No.	单车用量 Qty	Part Name
1	080V05000-7100	1	Oil Module
2	MQ6-03216-8323	2	Hex Bolt
3	MQ6-08042-0605	2	Screw Plug
4	MQ6-56631-0109	2	Sealing Ring
5	MQ6-08099-0023	1	Screw Plug
6	MQ6-03216-8317	5	Hex Bolt
7	080V05901-0127	1	Gasket

机油泵　Oil Pump

(销售组：080-#0130-0750)

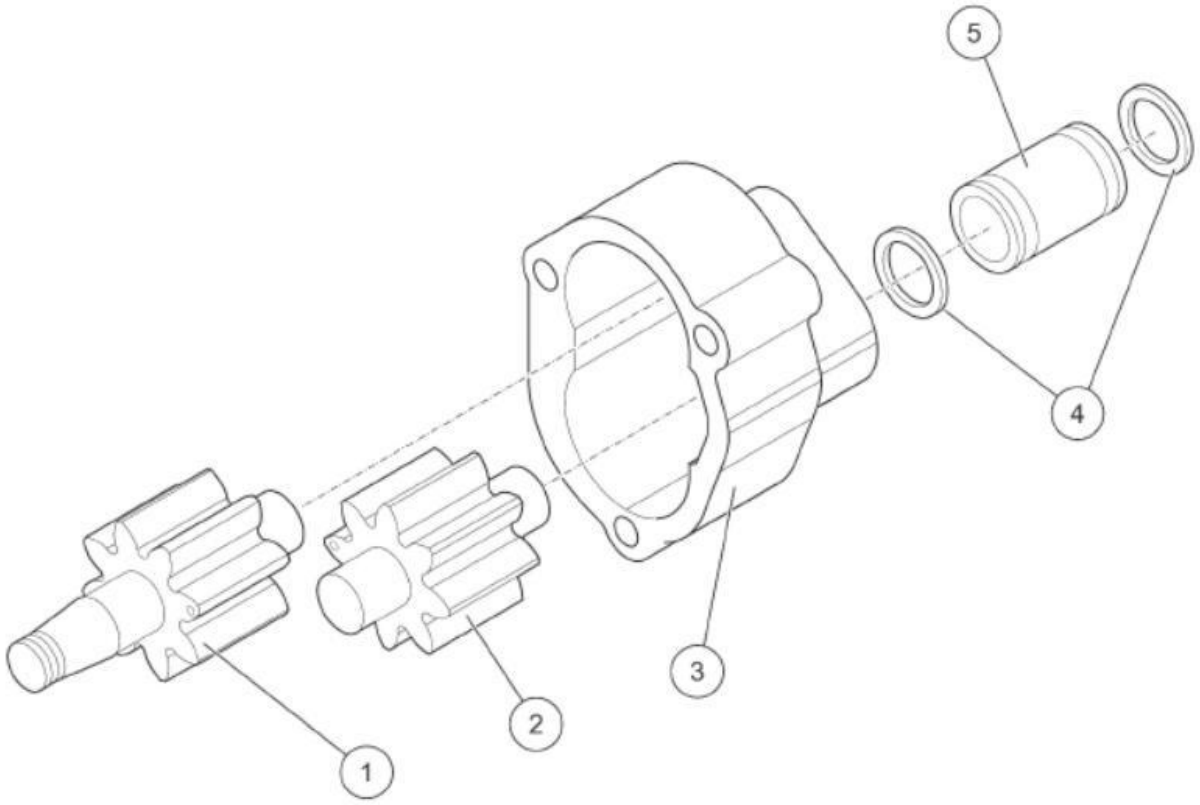

序号 No.	图号 Part No.	单车用量 Qty	Part Name
1	080V05104-6175	1	Gear assembly
2	080V05104-6177	1	Gear assembly
3	080V05102-0101	1	Oil Pump body
4	MQ6-56333-4245	2	Toric Seal
5	080V05207-0010	1	Coupling Sleeve

油底壳　Oil Sump

(销售组：080-#0140-0937)

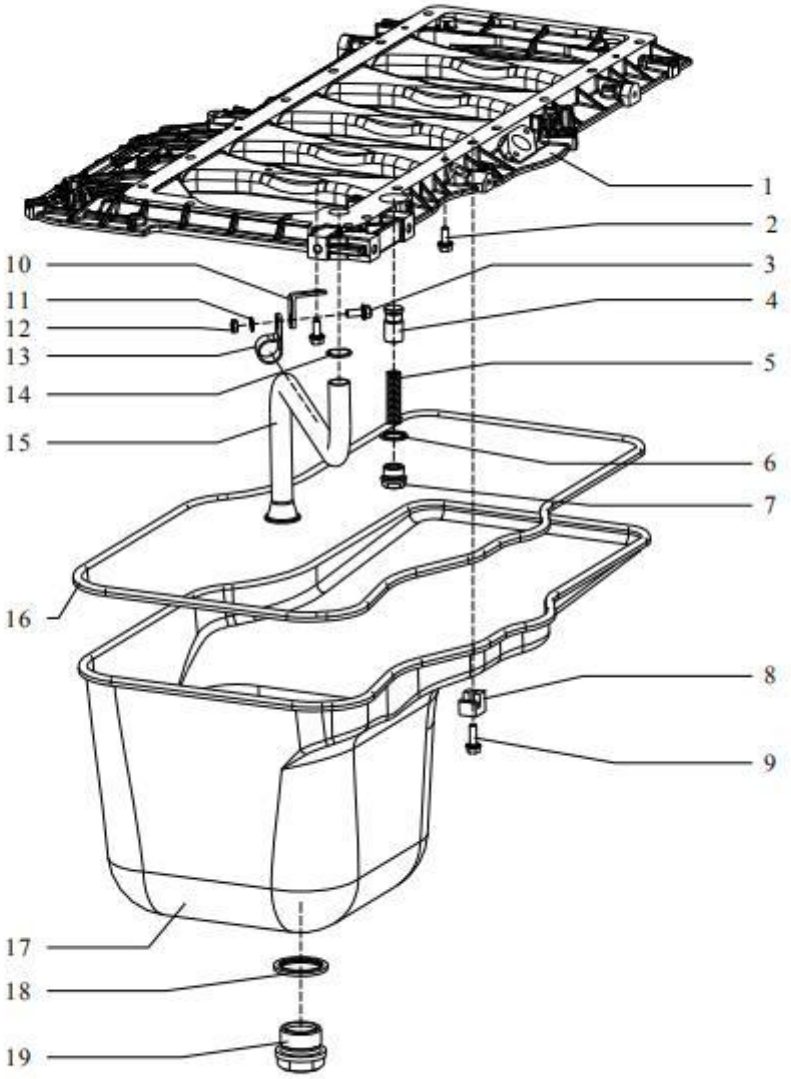

序号 No.	图号 Part No.	单车用量 Qty	Part Name
1	080V01108-0060	1	Crankcase Yoke
2	MQ6-03215-8309	19	Hex Bolt
3	MQ6-03215-8304	4	Hex Bolt

4	080V05410-0056	1	Piston for Pressure Valve
5	080V97601-0226	1	Pressure Spring
6	MQ6-56631-0111	1	Sealing Ring
7	080V90310-0153	1	Screw Plug
8	080V05840-0097	12	Block
9	MQ6-03216-8309	12	Hex Bolt
10	080V97485-0262	2	Bracket
11	MQ6-15013-0411	2	Washer
12	MQ6-11240-2104	2	Hexagon Nut
13	080V97401-0390	2	Clip
14	MQ6-56333-3258	1	Toric Seal
15	080V05703-5007	1	Tube
16	080V05904-0195	1	Gasket
17	080V05801-5725	1	Oil pan
18	MQ6-56631-0110	1	Sealing Ring
19	MQ6-08042-0207	1	Screw Plug

风扇　Fan

(销售组：080-#0140-0937)

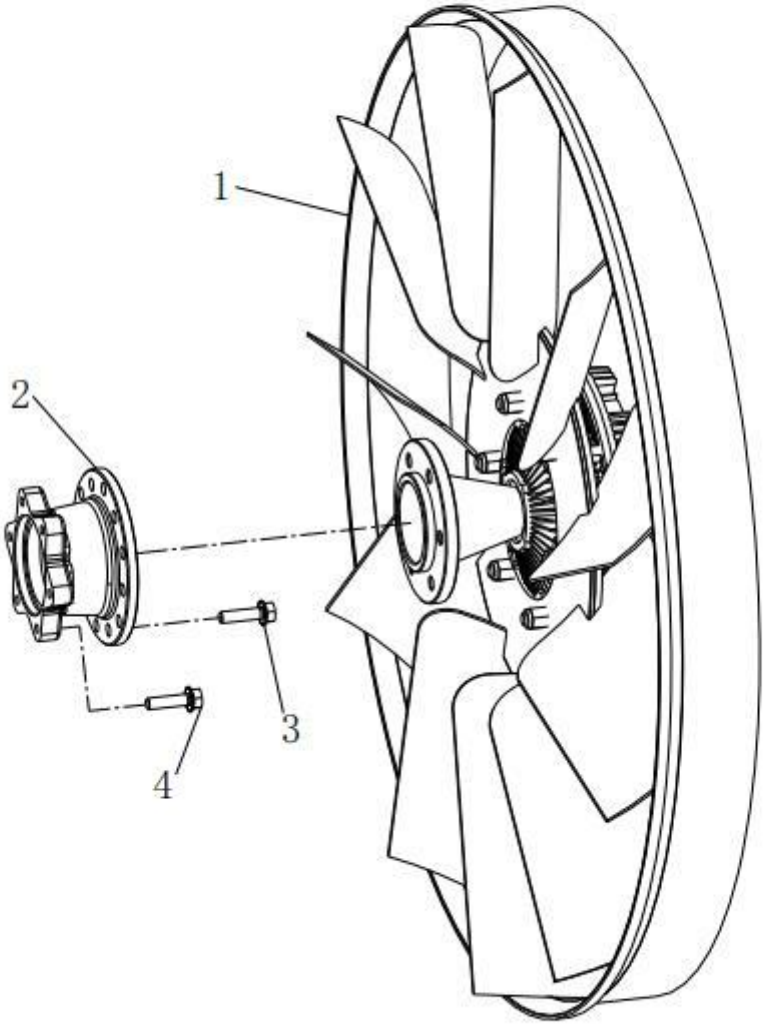

序号 No.	图号 Part No.	单车用量 Qty	Part Name
1	082V06601-0282	1	Fan
2	080V06611-0121	1	Fan Flange
3	MQ6-03216-8304	6	Hex bolt
4	MQ6-03216-8304	6	Hex bolt

燃油管路系统　Fuel transport system

(销售组：080-#0151-0030)

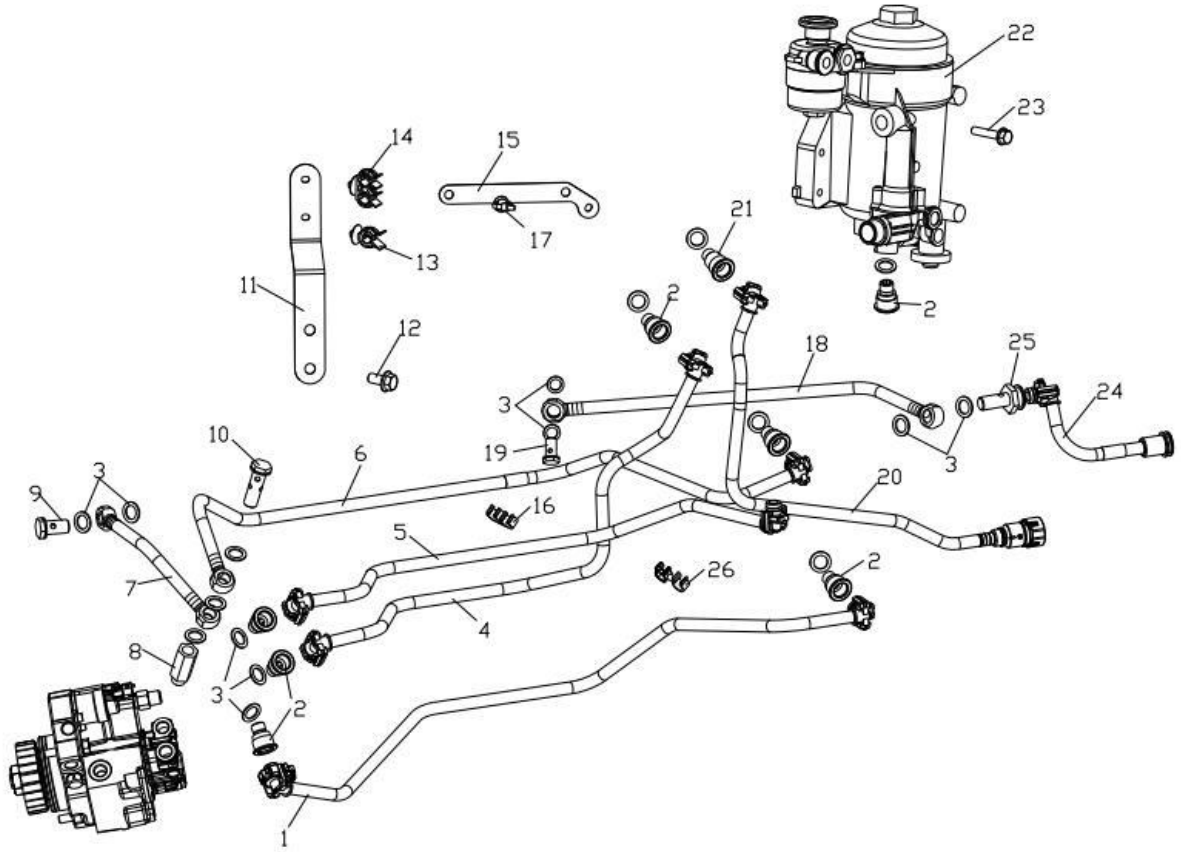

序号 No.	图号 Part No.	单车用量 Qty	Part Name
1	081V12307-5001	1	Fuel pipe from filter to pump
2	082V98150-0173	7	Quick-fit connector
3	MQ6-56631-0106	17	Sealing ring
4	081V12304-5939	1	Fuel pipe from pre-filter to feed pump
5	081V12304-5695	1	Fuel pipe from feed pump to filter
6	081V12305-5304	1	Fuel leakage pipe from pump to filter

7	080V12305-5303	1	Fuel leakage pipe from injector
8	080V98130-0052	1	Bolt connector
9	90003962621	1	Hollow bolt
10	080V98150-0176	1	Hollow bolt
11	080V97485-0195	1	Bracket
12	MQ6-03216-8404	2	Hex bolt
13	080V97401-0560	1	Single pipe bracket
14	080V97401-0551	1	Double pipe bracket
15	080V12340-0106	1	Bracket
16	080V97401-0559	4	Double pipe bracket
17	080V97401-0557	1	Cord
18	080V12305-7001	1	Fuel leakage pipe from rail
19	080V98150-0175	1	Hollow bolt
20	081V12304-5942	1	Fuel pipe from tank to pre-filter
21	082V98150-0172	1	Quick-fit connector
22	201V12501-7289	1	Filter
23	MQ6-03216-8308	3	Hex bolt
24	081V12305-5261	1	Fuel leakage pipe from filter
25	082V98150-0171	1	Hollow quick-fit connector
26	080V97401-0552	6	Double pipe bracket

排气管 Exhaust Manifold

(销售组：081-#0160-0445)

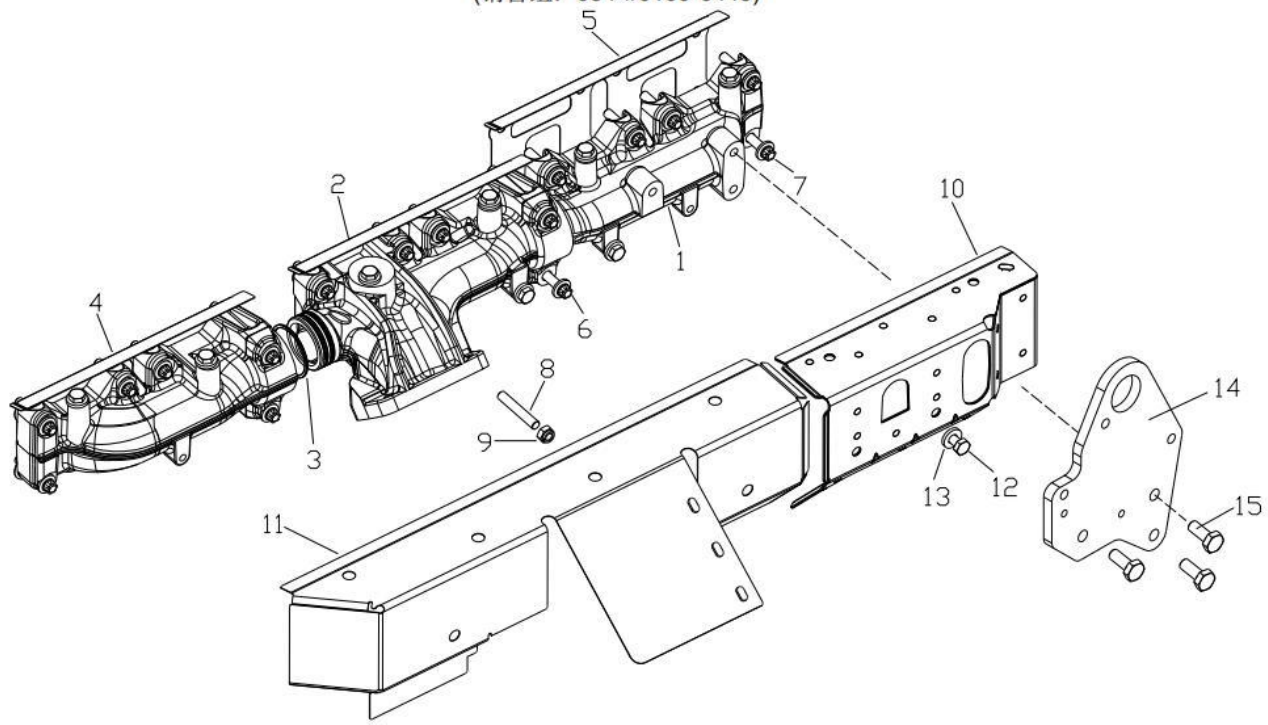

序号 No.	图号 Part No.	单车用量 Qty	Part Name
1	081V08101-6327	1	Exhaust elbow ZYL 1-2
2	081V08102-0209	1	Exhaust elbow ZYL 3-4
3	080V98701-0085	16	Seal ring
4	081V08102-0253	1	Exhaust elbow ZYL 5-6
5	081V08901-0269	3	Gasket
6	080V90490-0090	4	Screw

7	080V90490-0102	18	Screw
8	080V90210-0012	2	Stud
9	MQ6-11249-0017	2	Hexagon nut
10	080V08120-5284	1	Heat protection plate ZYL 1-2
11	081V08120-5285	1	Heat protection plate ZYL 1-2
12	MQ6-01289-0266	10	Hex bolt
13	080V90710-0314	10	Washer
14	080V19202-0208	1	Lifting Eye
15	MQ6-01324-5415	3	Hex Bolt

凸轮轴　Camshaft

(销售组：080-#0170-0269)

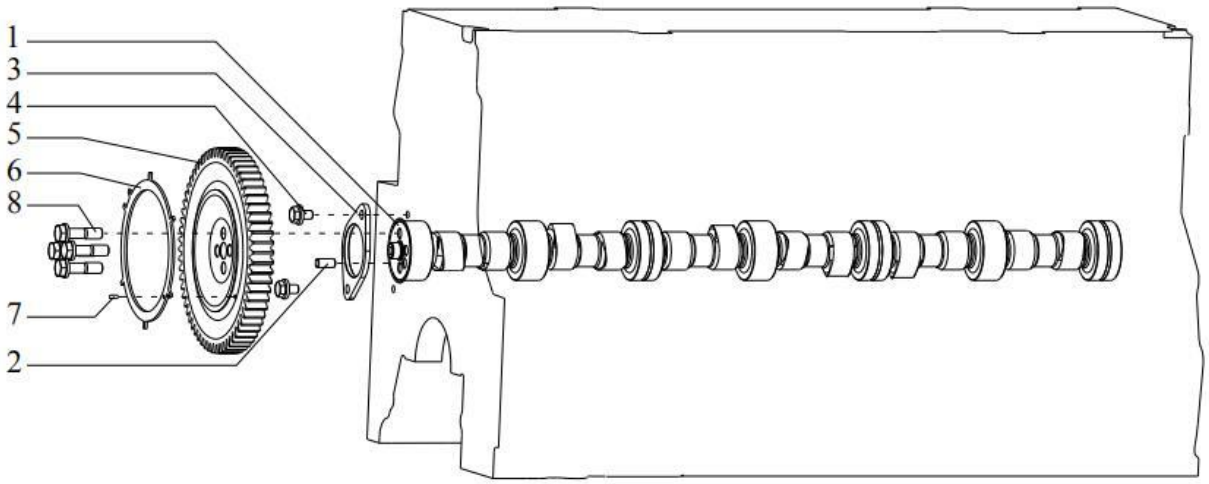

序号 No.	图号 Part No.	单车用量 Qty	Part Name
1	080-04401-0789	1	Camshaft
2	MQ6-22022-1011	1	Dowel Pin
3	080V98112-0240	1	Flange
4	MQ6-03216-8303	2	Hex Bolt
5	080V04501-2009	1	Camshaft -Gear
6	080V04501-2001	1	Pulse Wheel
7	MQ6-22022-0606	1	Dowel Pin
8	080V90020-0300	4	Hex Collar Bolt

供油系统　Fuel feed system

(销售组：080-#0211-0478)

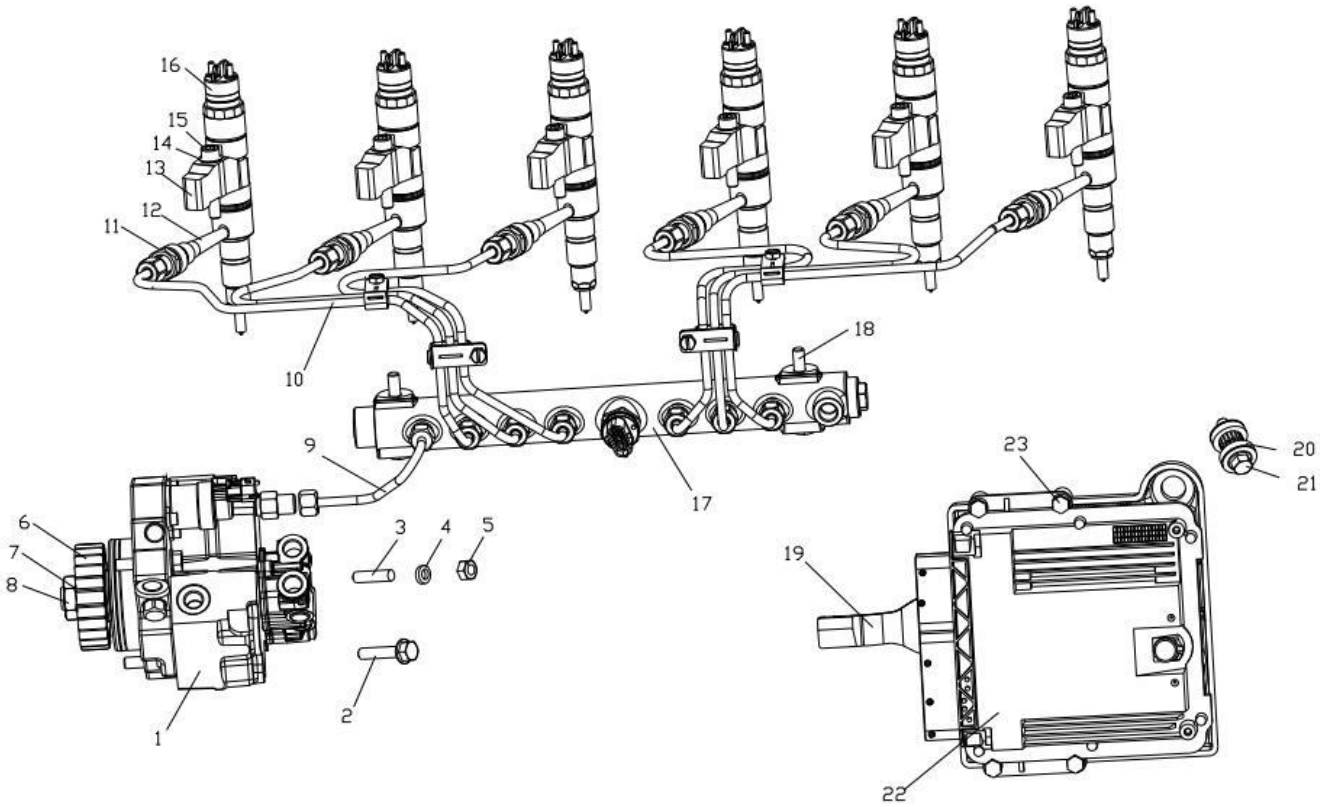

序号 No.	图号 Part No.	单车用量 Qty	Part Name
1	080V11103-7763	1	Pump
2	MQ6-03216-8308	2	Hex bolt
3	MQ6-06138-0709	1	Stud
4	MQ6-15013-0411	1	Washer
5	MQ6-11064-2114	1	Nut
6	080V11301-0259	1	Pump drive gear
7	MQ6-15013-0417	1	Washer

8	MQ6-11022-6408	1	Hexagon nut
9	080V10304-0295	1	High presser pipe from pump to rail
10	080V10300-6151	1	High presser pipe assembly
11	080V10108-0013	6	Nut
12	080V10301-6159	6	High presser connect
13	080V10104-0056	6	Impact block
14	MQ6-15140-2102	6	Sphere washer
15	MQ6-02191-0413	6	Column bolt
16	080V10100-6085	6	Injector
17	080V10311-6063	1	Rail
18	MQ6-03216-8311	2	Hex bolt
19	082V11640-0287	1	ECU bracket
20	200V96210-0077	6	Bush gasket
21	MQ6-02829-0025	3	Hex bolt
22	202V25803-7915	1	ECU
23	MQ6-03216-8206	4	Hex bolt

飞轮壳　Flywheel Housing

(销售组：081-#0270-0319)

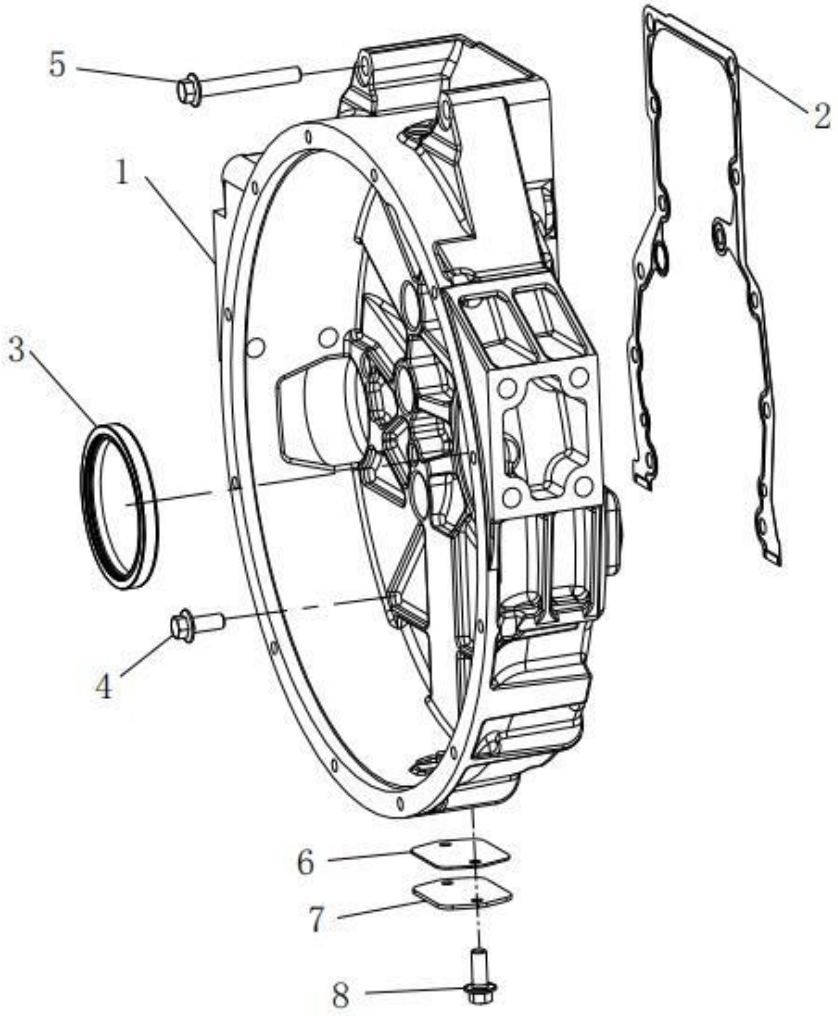

No.	Part No.	Qty	Part Name
1	082V01401-5197	1	Flywheel Housing
2	081V01904-0010	1	Gasket
3	080V01510-0281	1	Radial shaft seal
4	MQ6-03216-8506	9	Hex bolt
5	MQ6-03216-8634	2	Hex bolt
6	201V96601-0382	2	Gasket
7	201V98112-0119	2	Cover
8	MQ6-03216-8303	4	Hex bolt

单缸空压机连接部件　Connector Parts for Single Cylinder Air Compressor

(销售组：081-#0250-0311)

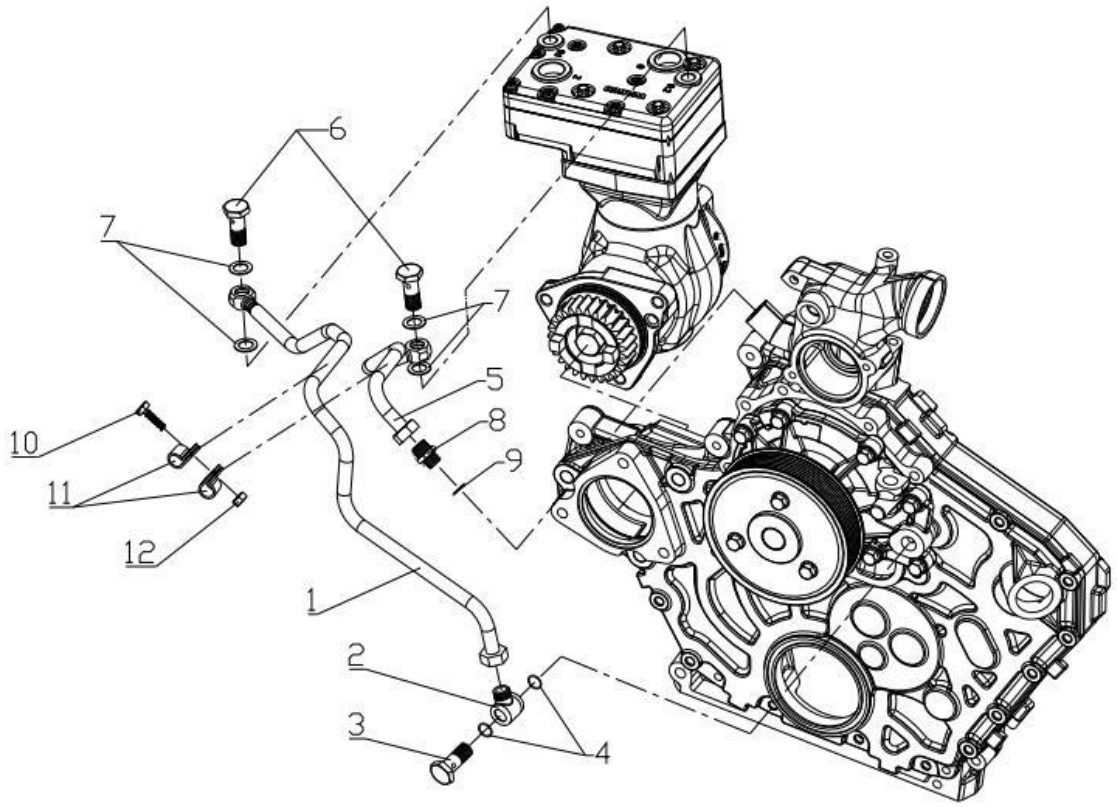

序号 No.	图号 Part No.	单车用量 Qty	Part Name
1	080V06303-5680	1	Coolant pipe
2	082V98110-0186	1	Swivel union
3	082V98150-0176	1	Hollow bolt
4	MQ6-56936-9738	2	O-Ring
5	080V06303-5681	1	Coolant pipe
6	080V98150-0175	1	Hollow bolt
7	MQ6-56631-0106	4	Sealing ring
8	MQ6-71251-2403	1	Straight union
9	MQ6-56631-0107	1	Sealing ring
10	MQ6-03216-8203	1	Hexagon head bolt
11	MQ6-67300-1026	2	Fastening clamp
12	MQ6-11251-2017	1	Hexagon nut

单缸空压机连接部件　Connector Parts for Single Cylinder Air Compressor

(销售组：081-#0250-0311)

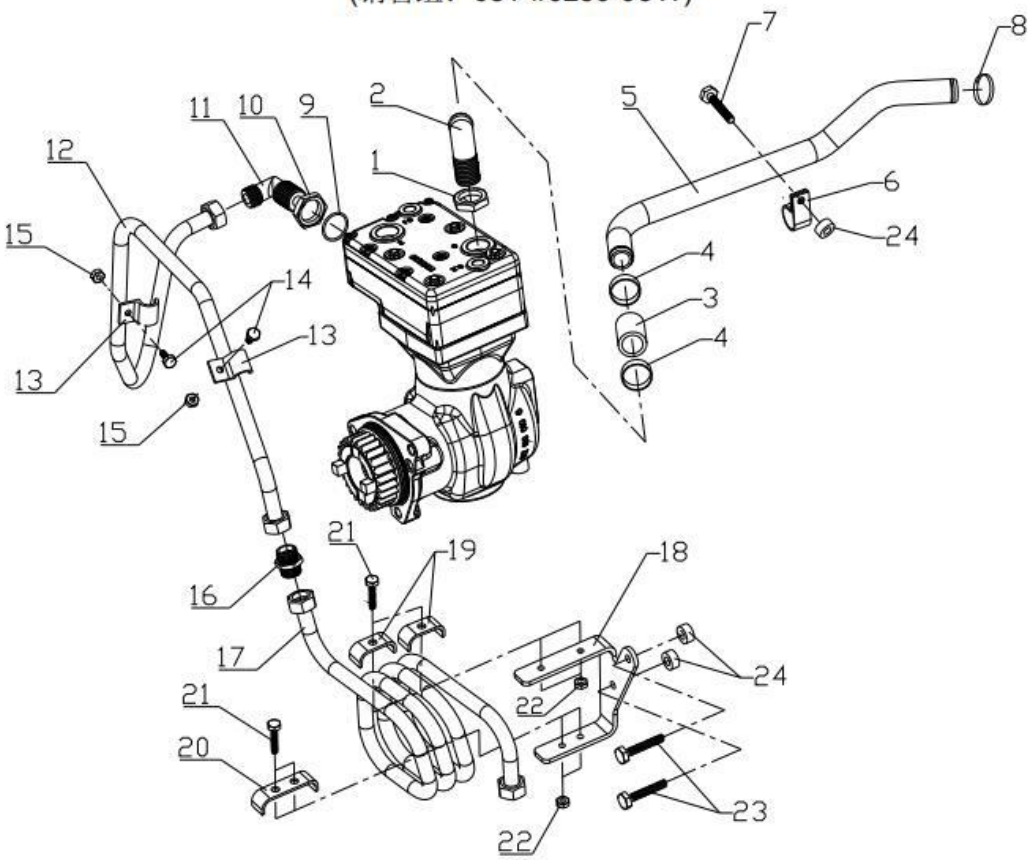

序号 No.	图号 Part No.	单车用量 Qty	Part Name
1	MQ6-79090-0202	1	Hexagon nut
2	080V54120-0386	1	Elbow bend pipe
3	MQ4-27199-1225	1	Hose
4	MQ6-67420-1235	2	Spring clip
5	082V54120-5352	1	Suction pipe
6	080V97401-0390	1	Clip
7	MQ6-03216-8306	1	Hexagon head bolt

8	MQ6-67420-1232	1	Spring clip
9	MQ6-56333-3256	1	O ring
10	MQ6-11164-8359	1	Hexagon nut
11	MQ6-71759-0001	1	Elbow union
12	850W51221-5004	1	Brake line assmebly Part 1
13	MQ6-67150-0106	2	Clip
14	MQ6-03216-8203	2	Hexagon head bolt
15	MQ6-11251-2017	2	Hexagon nut
16	MQ6-71070-2133	1	Straight union
17	850W51221-5005	1	Brake line assmebly Part 2
18	080V51710-0001	1	Bracket
19	MQ6-67066-0211	2	Clip
20	850W51710-0041	1	Clip
21	MQ6-03216-8207	4	Hexagon head bolt
22	MQ6-11251-2017	4	Hexagon nut
23	MQ6-03216-8310	2	Hexagon head bolt
24	080V91701-0356	3	Washer