SINOTRUK

MC07 ENGINE

SPARE PARTS CATALOG

PART -II

https://www.sinosoon.com Email:market@sinosoon.com

INDEX

Refrigerant Compressor and Belt	Page 3
Oil Dipstick	Page 5
Engine Support	Page 6
Coolant Pipes	Page 7
Crankcase Bleeder	Page 8
Coolant Pump	Page 10
Sensors-1	Page 11
Sensors	Page 12
Wiring Harness	Page 13
Wiring Harness Bracket-1	Page 14
Wiring Harness Bracket	Page 15

空调压缩机和皮带轮　Refrigerant Compressor and Belt Pulley

（销售组：080-#0360-0464、080-#0480-0257）

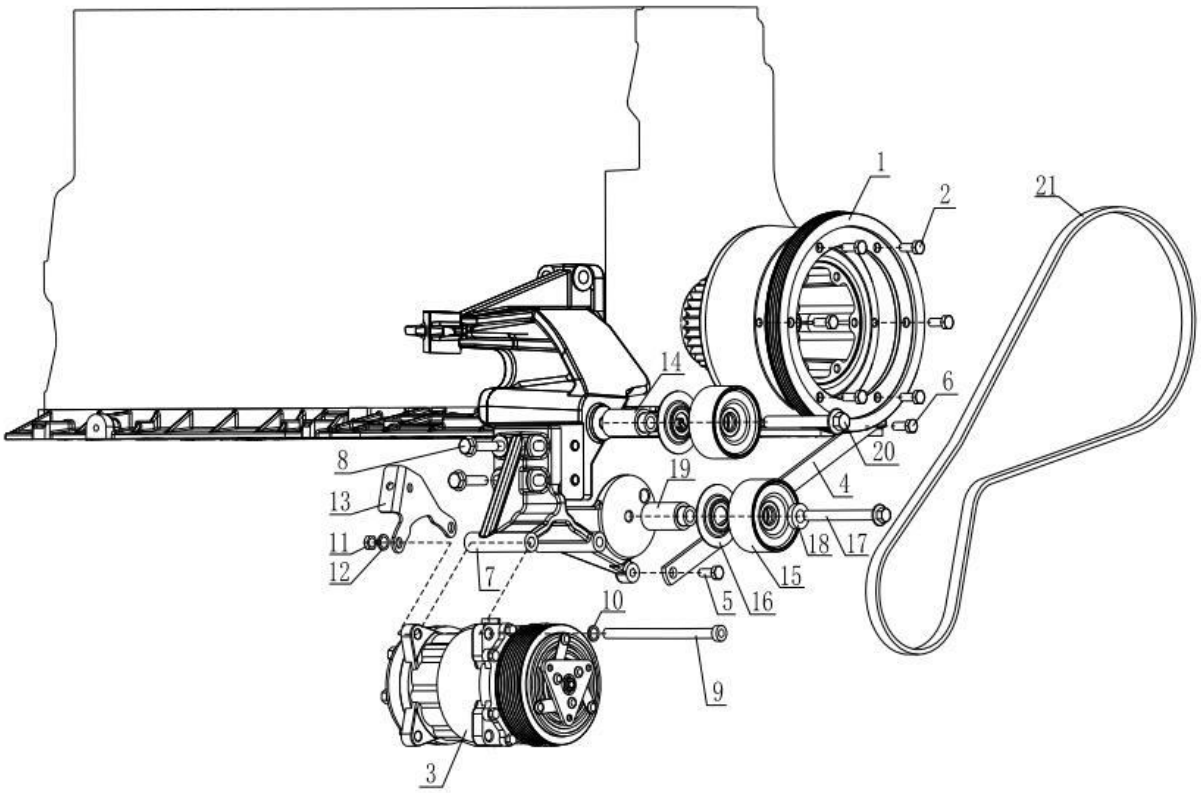

序号 No.	图号 Part No.	单车用量 Qty	Part Name
1	080V02601-0607	1	Belt Pulley
2	MQ6-01283-5113	6	Hex Bolt
3	080V77970-7026	1	Refrigerant Compressor
4	080V19101-0303	1	Bracket
5	MQ6-03216-8304	1	Hex Bolt
6	MQ6-03216-8405	1	Hex Bolt
7	080V19101-0382	1	Bracket
8	MQ6-03215-6407	4	Hex Bolt

9	MQ6-02109-0050	2	Cylinder Screw
10	MQ6-15033-0814	2	Washer
11	MQ6-11064-2115	2	Hexagon Nut
12	MQ6-15013-0412	2	Washer
13	080V19101-0439	1	Bracket
14	080V95840-0292	1	Spacer Sleeve
15	080V95800-6099	2	Cable Roller
16	080V91610-0010	2	Cover Plate
17	MQ6-03216-8417	1	Hex Bolt
18	080V90710-0275	1	Shim
19	080V19101-0422	1	Spacer Sleeve
20	MQ6-03216-8515	1	Hex Bolt
21	080V96820-0372	1	Narrow joined belt

机油尺　Oil Dipstick

(销售组：080-#0380-0757)

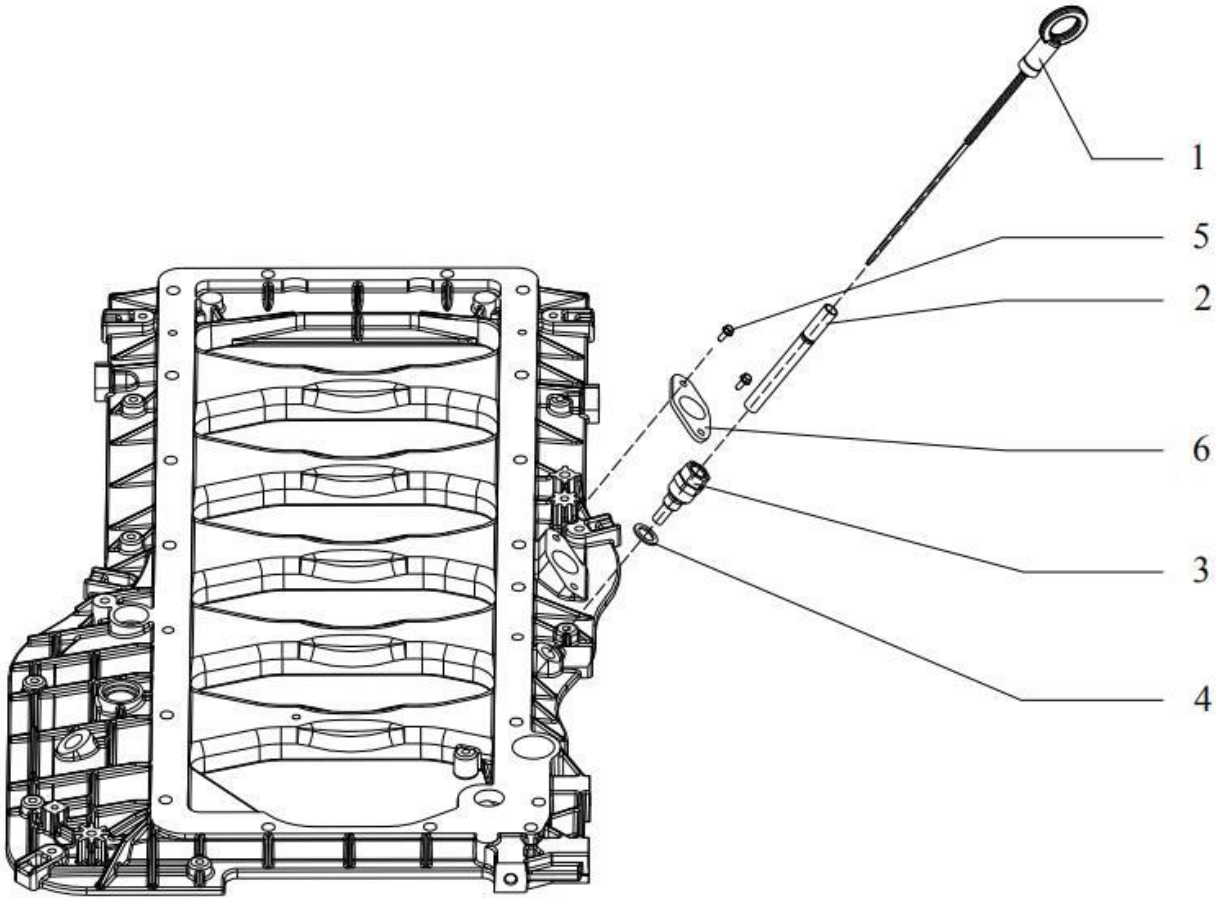

序号 No.	图号 Part No.	单车用量 Qty	Part Name
1	080V05805-5633	1	Oil Dipstick
2	080V05806-5148	1	Guide Tube
3	202V98181-0004	1	Nozzle
4	MQ6-56631-0106	1	Sealing Ring
5	MQ6-03216-8305	1	Hex Bolt
6	080V98112-0284	1	Rivetted Flange

发动机支架及悬置　Engine Support

(销售组：080-#0410-0830)

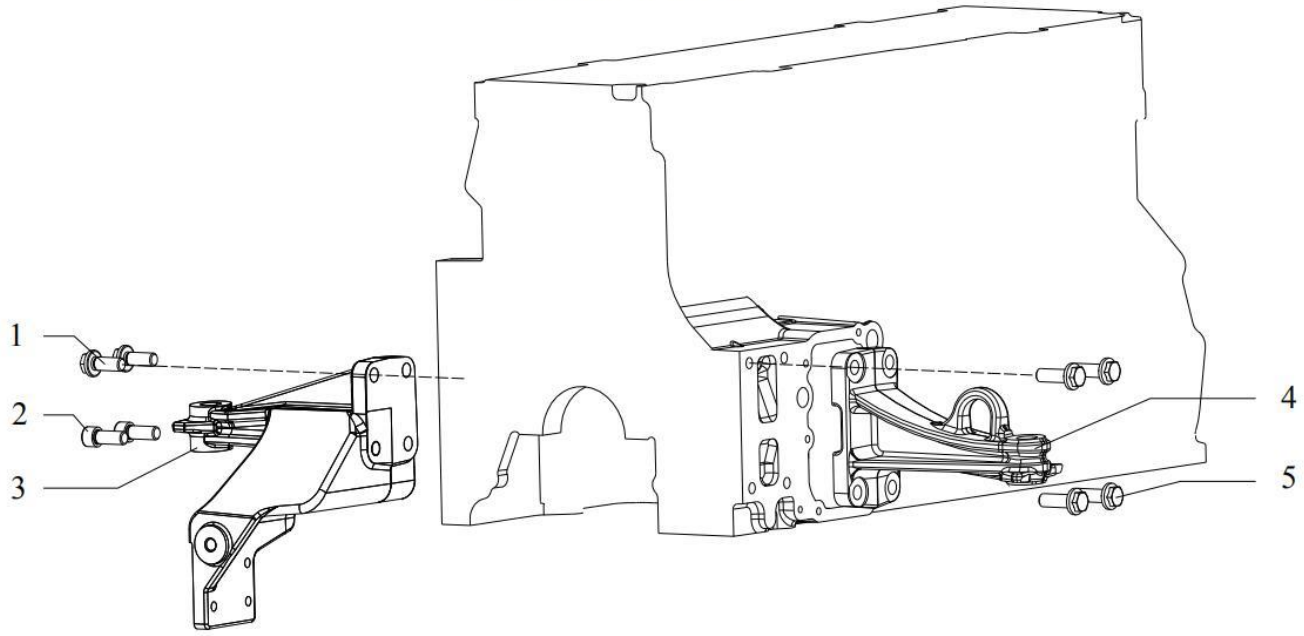

序号 No.	图号 Part No.	单车用量 Qty	Part Name
1	MQ6-02813-4511	2	Hex Bolt
2	MQ6-02094-4610	2	Cylinder Screw
3	082V19210-0131	1	Engine Support at outlet side(lean 3.1 grad)
4	080V19210-0130	1	Engine Support at inlet side(lean 3.1 grad)
5	MQ6-02813-4512	4	Hex Bolt

出水管　Coolant Pipes

(销售组：081-#0420-0104)

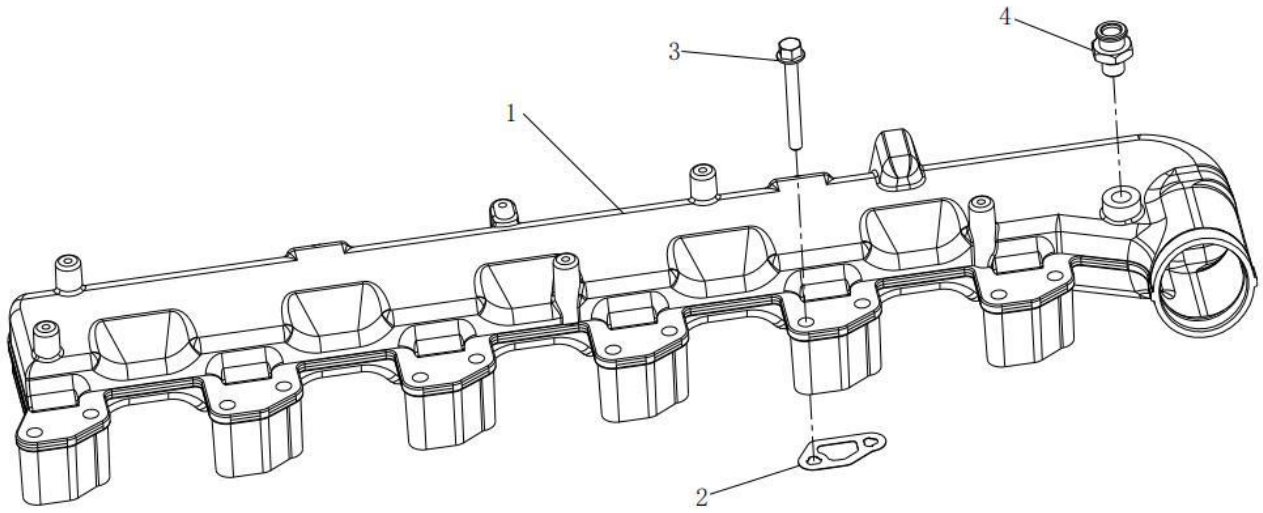

序号 No.	图号 Part No.	单车用量 Qty	Part Name
1	081V06303-5565	1	Coolant pipes
2	080V06903-0067	6	Gasket
3	MQ6-03216-8311	12	Hex bolt
4	080V98181-6019	1	Straight union

曲轴箱通风　Crankcase Bleeder

(销售组：080-#0440-0291)

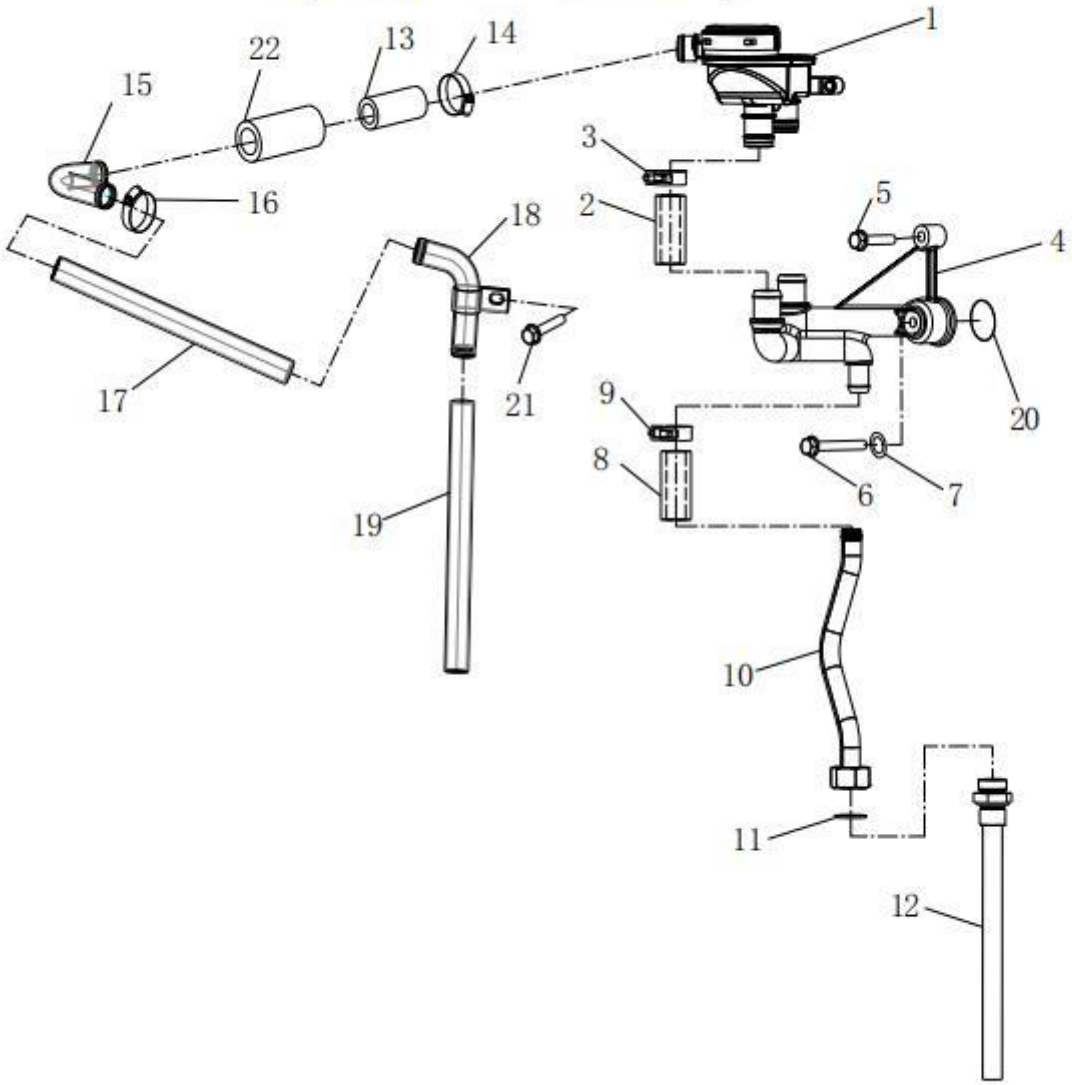

序号 No.	图号 Part No.	单车用量 Qty	Part Name
1	082V01804-0011	1	Oil separator
2	MQ4-27199-1260	2	Hose
3	MQ6-67420-1235	4	Spring clip
4	080V01802-0448	1	BLEEDER LINE

5	MQ6-03216-8307	1	Hex bolt
6	MQ6-03216-8332	1	Hex bolt
7	MQ6-56631-0125	1	Sealing ring
8	MQ4-27199-1270	1	Hose
9	MQ6-67420-1226	2	Spring clip
10	080V05703-5799	1	Oil return pipe
11	MQ6-56190-0722	2	Sealing ring
12	080V05702-5948	1	Oil return pipe
13	082V96330-0246	1	Hose
14	MQ6-67420-1232	2	Spring clip
15	082V01802-5670	1	Tube
16	90003989340	3	Hose clamp
17	082V96330-0333	1	Hose
18	082V01802-5600	1	Tube
19	082V96330-0334	1	Hose
20	MQ6-56332-2167	1	O-RING
21	MQ6-03216-8305	1	Hex bolt
22	080V96330-0366	1	Insulating hose

水泵　Coolant Pump

(销售组：080-#0470-0648)

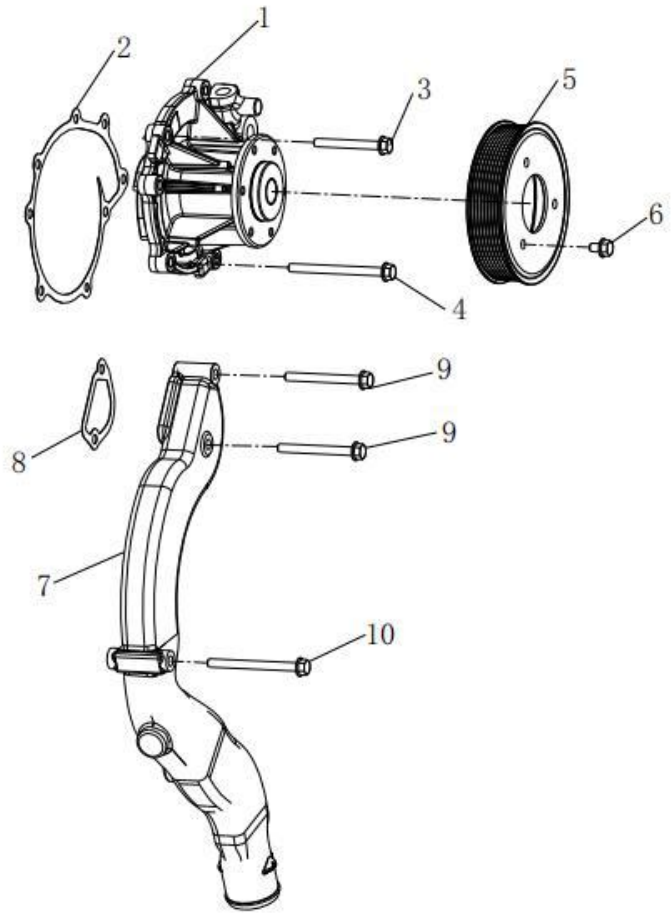

序号 No.	图号 Part No.	单车用量 Qty	Part Name
1	080V06500-6680	1	Coolant pump
2	080V06901-0196	1	Gasket
3	MQ6-03216-8314	5	Hex bolt
4	MQ6-03216-8317	3	Hex bolt
5	201V06503-0384	1	Pulley
6	MQ6-03215-8302	3	Hex bolt
7	080V06302-0861	1	Coolant elbow
8	080V06903-0059	1	Gasket
9	MQ6-03216-8315	2	Hex bolt
10	MQ6-03216-8333	1	Hex bolt

传感器　Sensors

(销售组：081-#0600-0598)

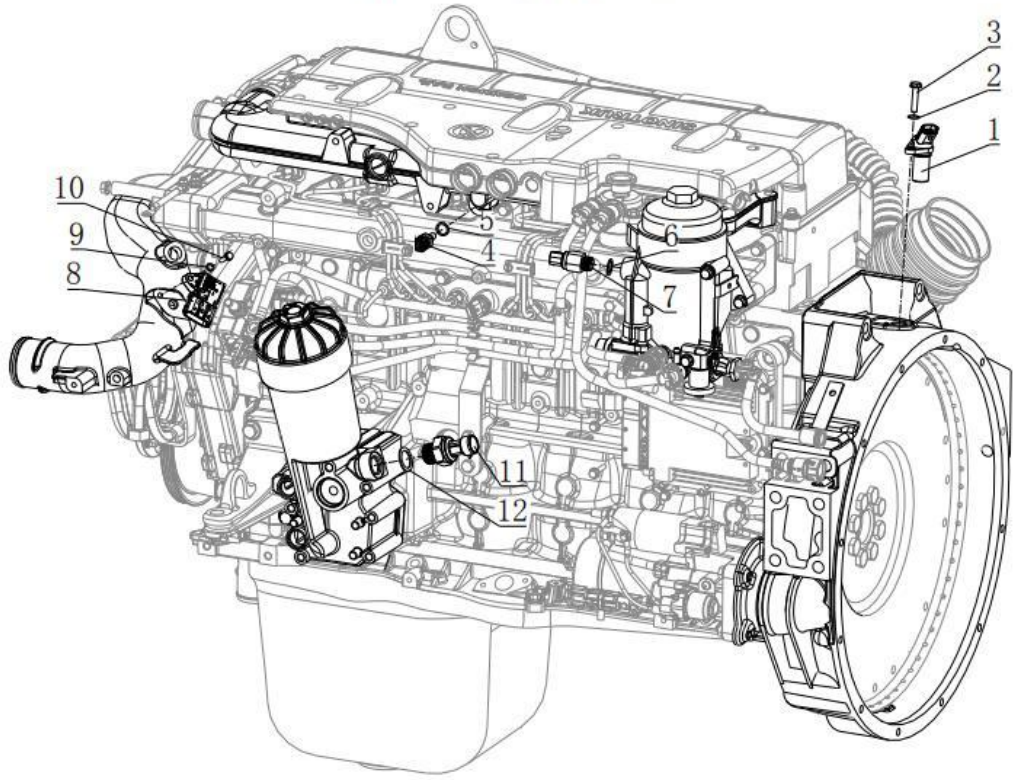

序号 No.	图号 Part No.	单车用量 Qty	Part Name
1	200V27120-7038	1	Speed Sensor
2	MQ6-15013-0409	1	Washer
3	MQ6-03216-8202	1	Hex Bolt
4	201V27421-0190	1	coolant water temperature sensor
5	MQ6-56631-0105	1	Sealing Ring
6	200V27421-0263	1	Fuel Pressure Sensor
7	VG2600080275	1	Gasket
8	VG1557090012	1	Temperature and Pressure Sensor
9	Q41804	1	Washer
10	Q150B0414	1	Bolt
11	VG1092090311	1	Oil Pressure Sensor
12	VG2600080275	1	Gasket

传感器　Sensors

(销售组：081-#0600-0598)

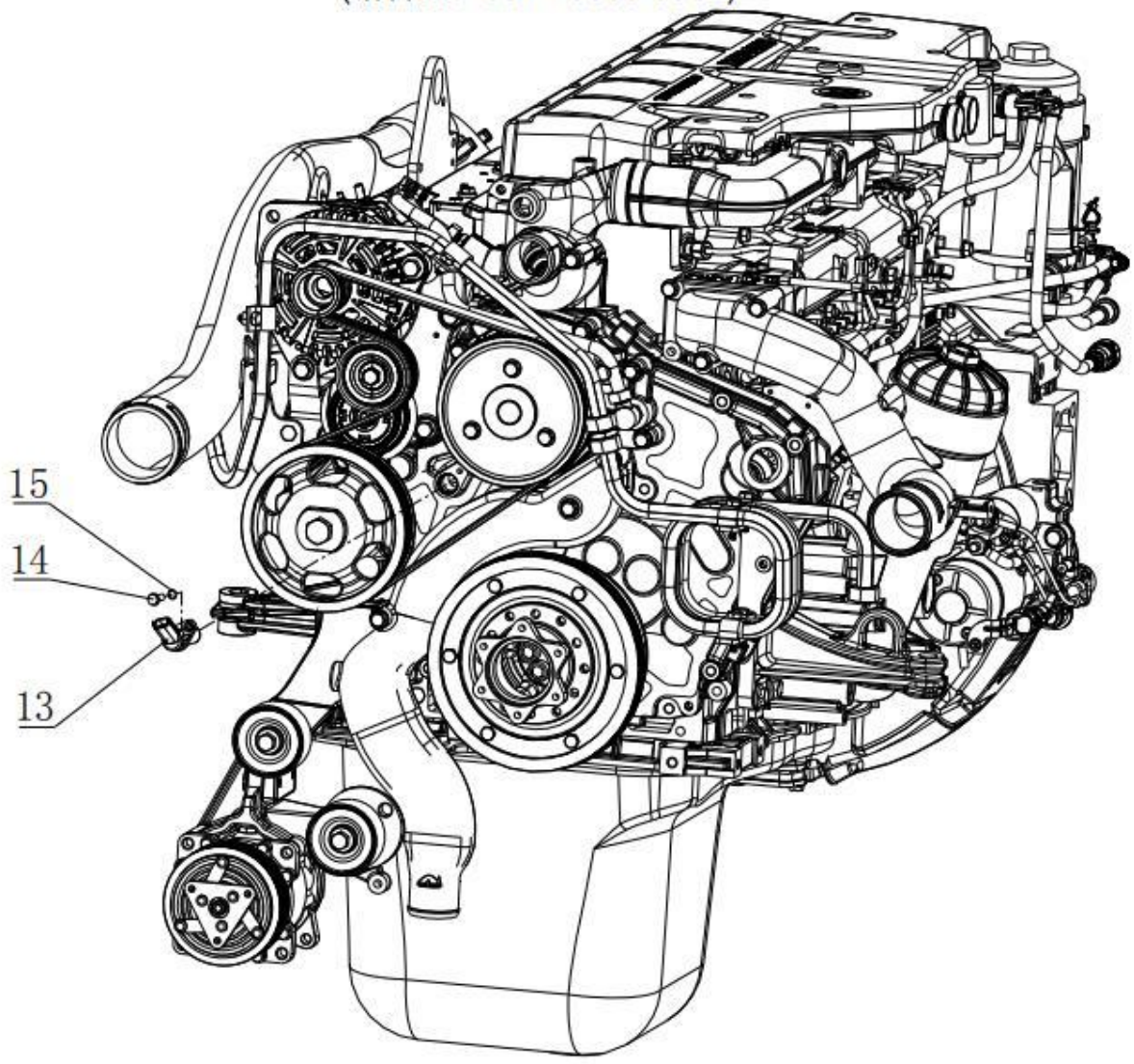

序号 No.	图号 Part No.	单车用量 Qty	Part Name
13	200V27120-7038	1	Speed Sensor
14	MQ6-03216-8203	1	Hex Bolt
15	MQ6-15013-0409	1	Washer

线束 Wiring Harness

(销售组：081-#0630-0566)

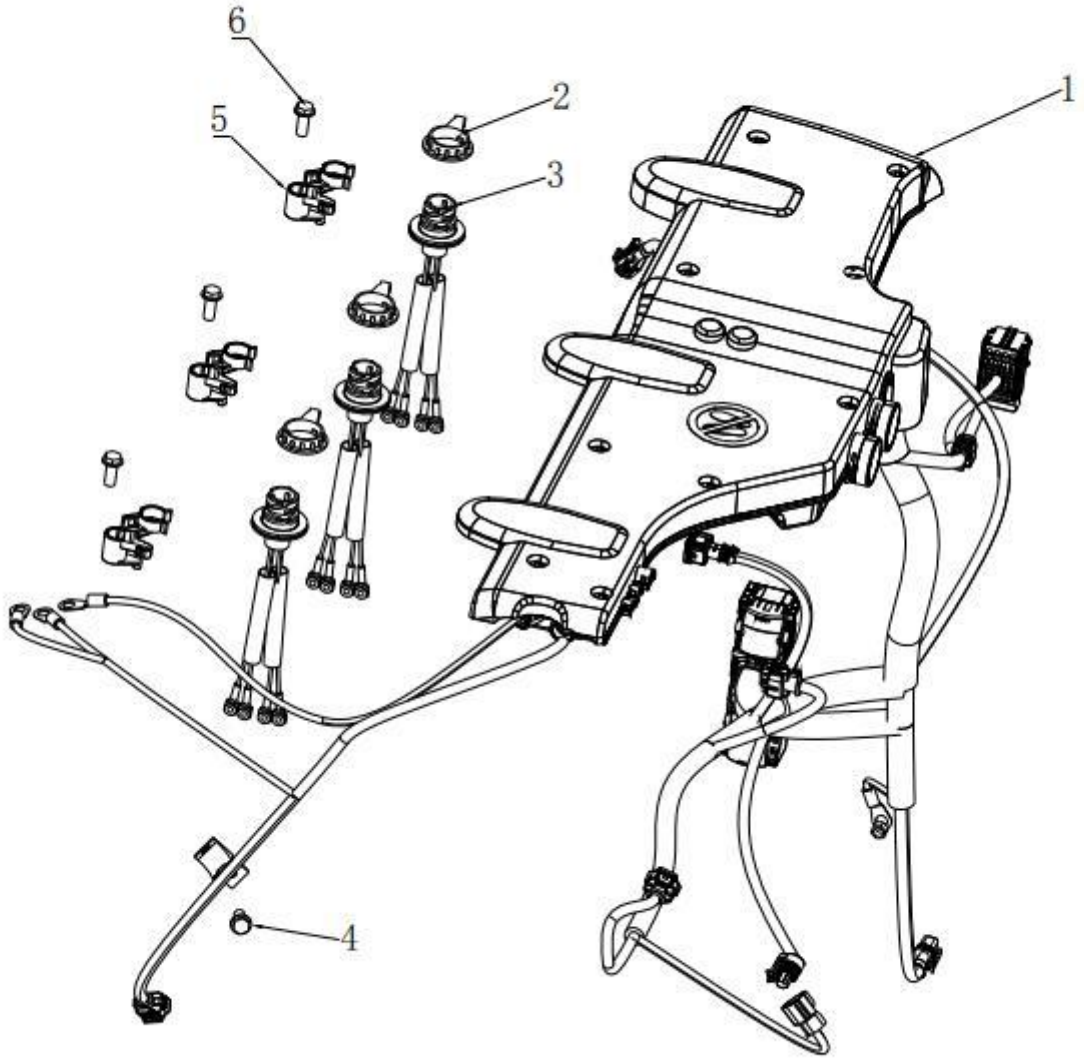

No.	Part No.	Qty	Part Name
1	810W25436-6000	1	Wiring Harness
2	080V25441-0288	3	Nut
3	080V25413-6089	3	Loom of Wires for Injector
4	MQ6-03219-0019	1	Bolt M 6X8-10.9-MAN183-B1
5	080V25441-0312	3	Bracket
6	MQ6-02192-0411	3	Cylinder Screw M8X35-8.8-A2C

线束支架　Wiring Harness Bracket

(销售组：081-#0630-0566)

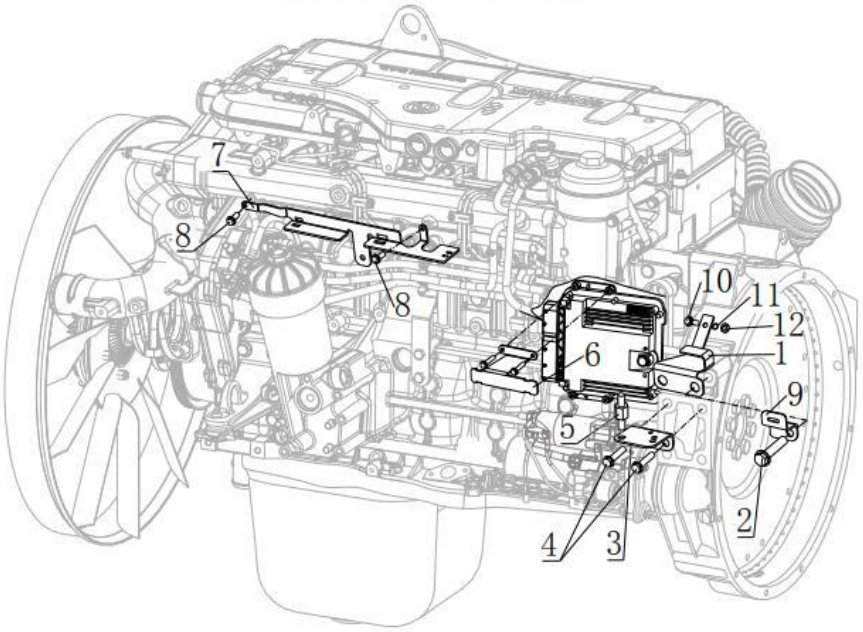

线束支架　Wiring Harness Bracket

序号 No.	图号 Part No.	单车用量 Qty	Part Name
1	081V12340-5009	1	Bracket
2	Q150B1635	2	Bolt
3	080V19240-5029	1	Ground Plate
4	MQ6-03216-8505	2	Hex Bolt
5	850W95190-0005	1	Attachment Bolt
6	081V25441-0263	1	Bracket
7	080V25441-0281	1	Bracket
8	MQ6-03216-8203	2	Hex Bolt
9	082V12340-5010	1	Bracket
10	MQ6-03216-8204	1	Hex Bolt
11	MQ6-15013-0409	1	Washer
12	MQ6-11064-2112	1	Nut

(销售组：081-#0630-0566)

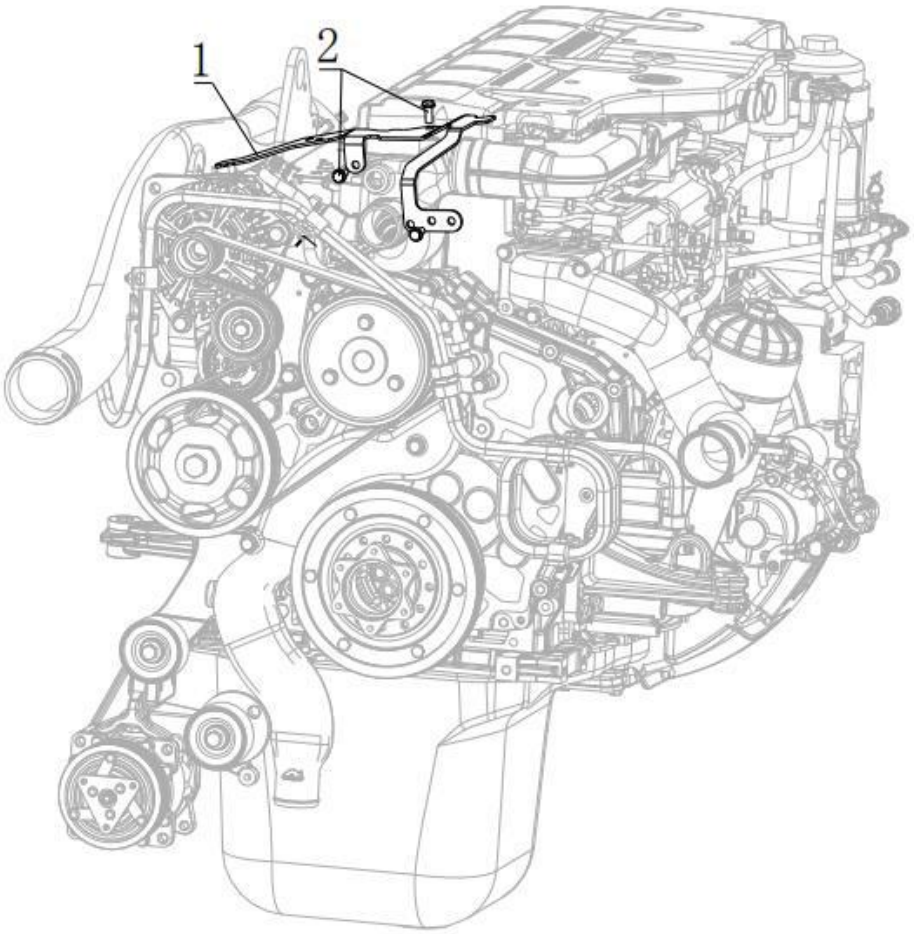

线束支架　Wiring Harness Bracket

序号 No.	图号 Part No.	单车用量 Qty	Part Name
1	081V25441-6100	1	Bracket
2	MQ6-03216-8306	2	Hex Bolt