SINOTRUK

MC11 ENGINE

SPARE PARTS CATALOG

Part -I

https://www.sinosoon.com Email:market@sinosoon.com

INDEX

CRANKSHAFT HOUSING	PAGE 3
CRANKSHAFT	PAGE 5
OIL FILTER & COOLER	PAGE 6
CAMSHAFT	PAGE 8
WATER PUMP	PAGE 9
TURBO CHARGER	PAGE 10
POWER TAKE OFF	PAGE 11
CONNECTING ROD, PISTON & VALVE	PAGE 12
FLYWHEEL	PAGE 15
FAN	PAGE 16
FUEL FILTER	PAGE 17
HIGH PRESSURE COMMON RAIL	PAGE 20
OIL FEED PIPE	PAGE 22
STARTER	PAGE 23
GENERATOR	PAGE 24
AIR COMPRESSOR	PAGE 25
AIR COMPRESSOR CONNECTING PART	PAGE 26
THERMOSTAT	PAGE 28
TURBO AIR SYSTEM	PAGE 29
OIL PAN	PAGE 30
EXHAUST SYSTEM	PAGE 31
INTAKE PIPE CONNECTOR	PAGE 32
COOLANT PIPE	PAGE 33
CABIN HEATING PIPE	PAGE 34

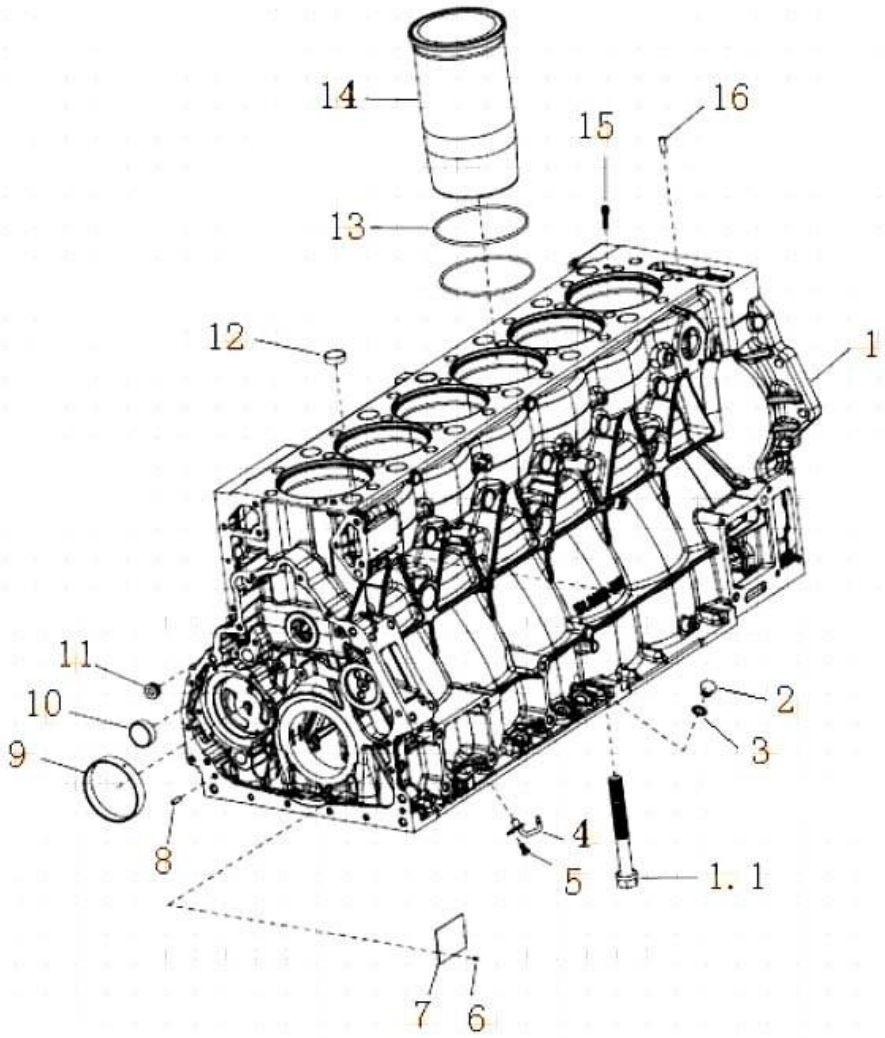

CRANKSHAFT HOUSING		
Serial	Part Number	Name
1	201-01102-6456	Crankshaft housing -rear power take off
1.1	200V90020-0391	Main bearing bolts
2	MQ6-08042-0603	Plugs
3	MQ6-56631-0106	Composite gasket
4	200V01601-0015	Oil Nozzle
5	MQ6-03216-8202	Hexagon flange bolts
6	VG2600010791	Signs rivets
7	202V97871-0195	Nameplate
8	MQ6-22140-1011	Cylindrical pin
9	201V93020-0405	Oil pump bushings

10	200V91606-0037	Cypriot bowl
11	MQ6-21649-0008	Sealing plug
12	200V91606-0036	Cypriot bowl
13	200V96501-0534	Cylinder liner seals
14	200V01201-0417	Cylinder liner
15	200V90310-0118	Locking screw
16	MQ6-22022-3563	Cylindrical pin

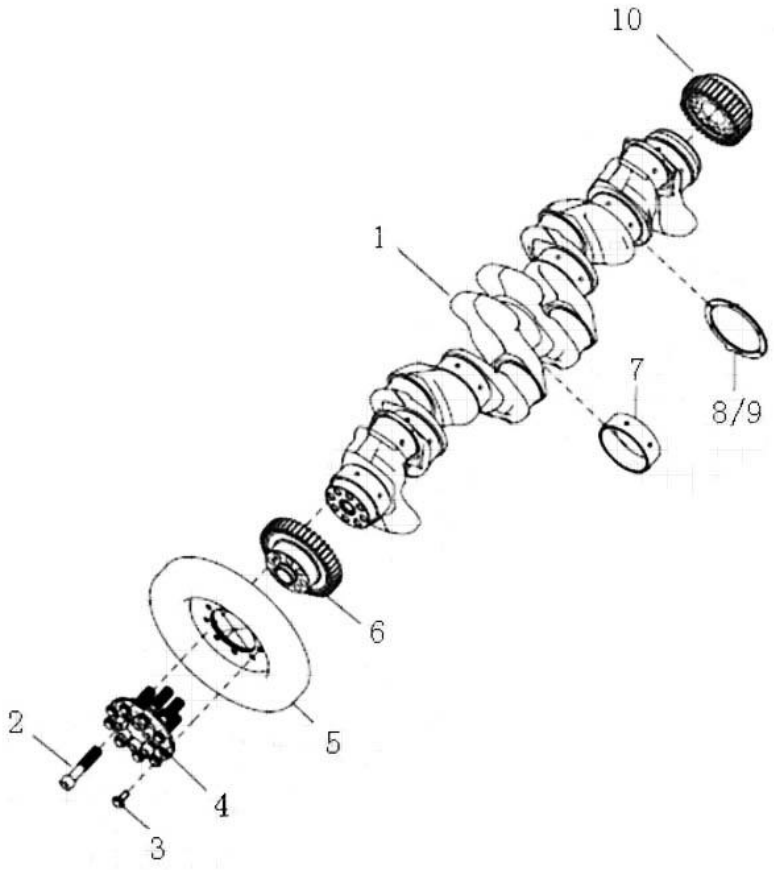

CRANKSHAFT		
Serial	Part Number	Name
1	201-02101-0671	Crankshaft
2	MQ6-02099-0418	Hexagon socket head cap screws
3	MQ6-03215-8405	Hexagon flange bolts
4	200V02602-0109	Damper hub
5	201V02201-0171	Shock Absorber
6	200-02115-0278	Crankshaft front gear
7	201V01113-6082	Main bearing
8	200V01114-0230	Lower thrust washer
9	200V01114-0231	Upper thrust washer
10	200-02115-6094	Crankshaft rear gear

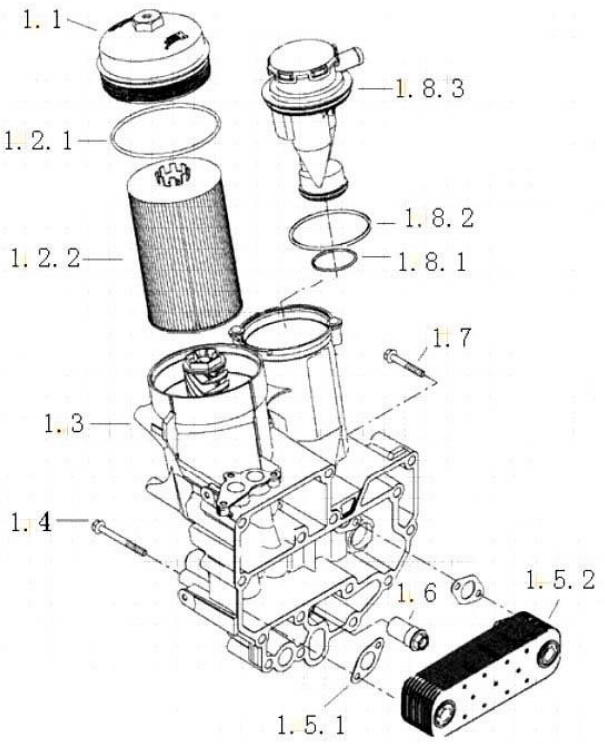

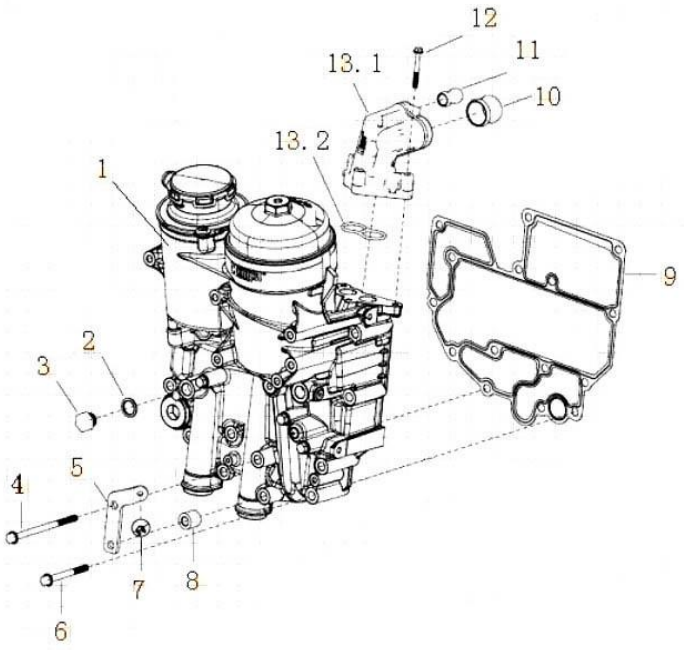

OIL FILTER & COOLER		
Serial	Part Number	Name
1	201V05000-7040	Oil module
1.1	200V05505-0011	Oil filter cover with ring
1.2	200V05504-0107	Oil filter core
1.2.1	200V96501-0558	O-ring
1.2.2	200V05504-0108	Oil filter core
1.3	201V05005-3001	Oil module housing
1.4	MQ6-03215-8315	Hexagon flange bolts
1.5	200V05601-0172	Oil cooler with gaskets
1.5.1	MQ6-56254-2203	Seal
1.5.2	200V05601-0171	Oil Cooler
1.6	202V05405-0014	Pressure limiting valve
1.7	MQ6-03215-8311	Hexagon flange bolts
1.8	200V01804-0024	Oil separator with ring
1.8.1	200V96501-0645	O-ring
1.8.2	200V96501-0644	O-ring
1.8.3	200V01804-0025	Oil separator
2	MQ6-56631-0109	Composite gasket
3	MQ6-08042-0605	Plugs
4	MQ6-03216-8420	Hexagon flange bolts

5	202V97480-0001	Urea heating return pipe bracket
6	MQ6-03216-8415	Hexagon flange bolts
7	1.90003E+11	Plastic fastening tape
8	200V93030-0013	Support block
9	202V05901-0145	Oil module gasket
10	200V98182-0092	Insert takeover
11	200V98182-0091	Insert takeover
12	MQ6-03216-8310	Hexagon flange bolts
13	200V05440-0003	Angled flange with gasket
13.1	200V05440-0004	Angled flange
13.2	200V05901-0135	Angled flange gasket

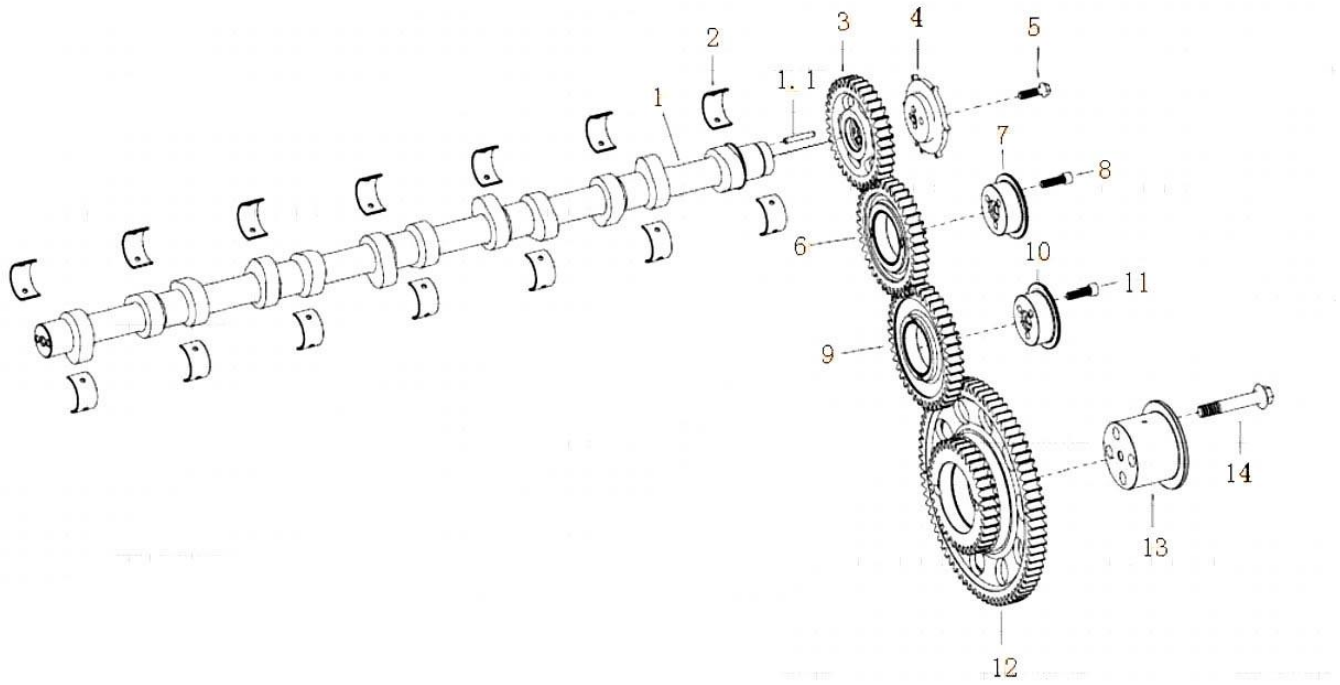

CAMSHAFT		
Serial	Part Number	Name
1	200-04400-6050	Camshaft assembly
1.1	MQ6-22022-0912	Cylindrical pin
2	200V04410-0177	Camshaft Bearing
3	200-04501-0191	Camshaft gear
4	200V04501-0190	Camshaft pulse plate
5	MQ6-03216-8306	Hexagon flange bolts
6	200-04505-5094	Cylinder head idler gear assembly
7	200V04506-0077	Small intermediate gear shaft
8	MQ6-02191-0410	Hexagon socket head cap screws
9	200-04505-5093	Crankcase intermediate gear assembly
10	200V04506-0077	Small intermediate gear shaft
11	MQ6-02191-0410	Hexagon socket head cap screws
12	200-04505-5133	Intermediate gear assembly
13	200V04506-0078	Large intermediate gear shaft
14	MQ6-03216-8615	Hexagon flange bolts

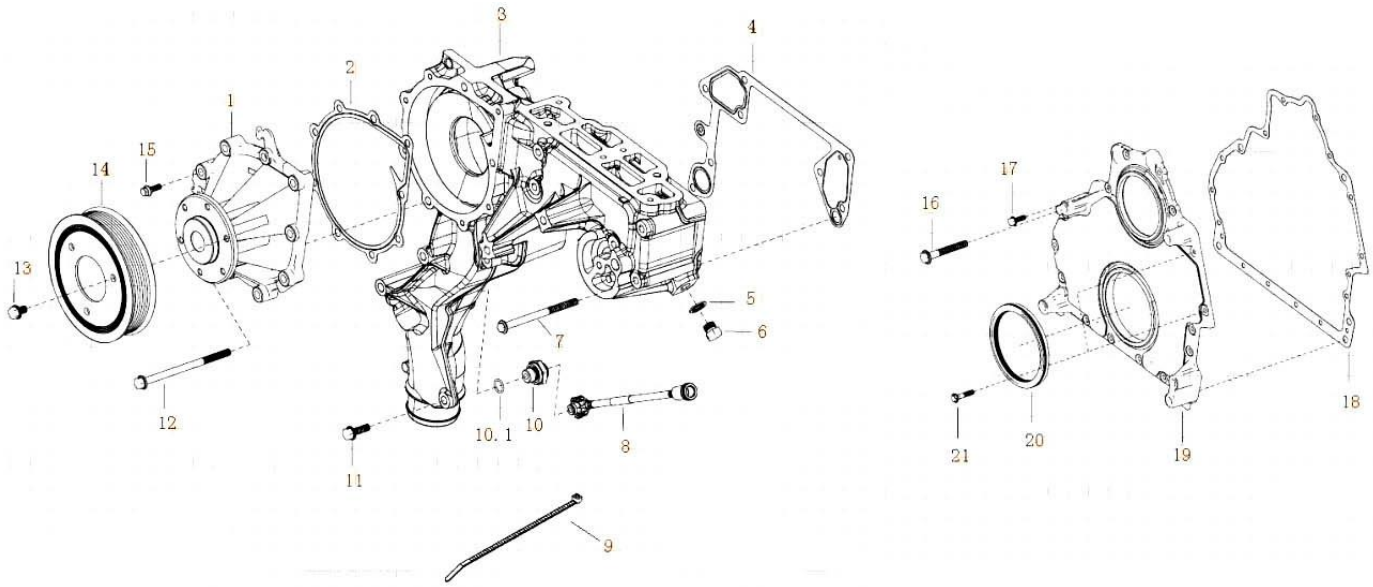

WATER PUMP		
Serial	Part Number	Name
1	200V06500-6675	Pump
2	201V06901-0192	Water pump gasket
3	200V06330-5041	Housing allocation
4	201V06903-0061	Allocation shell gasket
5	MQ6-56631-0106	Composite gasket
6	MQ6-08049-0031	Plugs
7	MQ6-03216-8317	Hexagon flange bolts
8	200V06303-5846	Urea heating return pipe
9	200V97401-0557	Single-line bundle Ties
10	200V98181-6026	Screw-through connector
10.1	200V96501-0571	O-ring
11	MQ6-03216-8305	Hexagon flange bolts
12	MQ6-03216-8320	Hexagon flange bolts
13	MQ6-03215-8302	Hexagon flange bolts
14	201V06503-0384	Water pump pulley
15	MQ6-03216-8308	Hexagon flange bolts
16	MQ6-03216-8514	Hexagon flange bolts
17	MQ6-03216-8305	Hexagon flange bolts
18	200V01905-0092	Front cover gasket
19	200V01501-5037	Front cover assembly
20	200V01510-6008	Crankshaft front oil seal
21	MQ6-03216-8308	Hexagon flange bolts

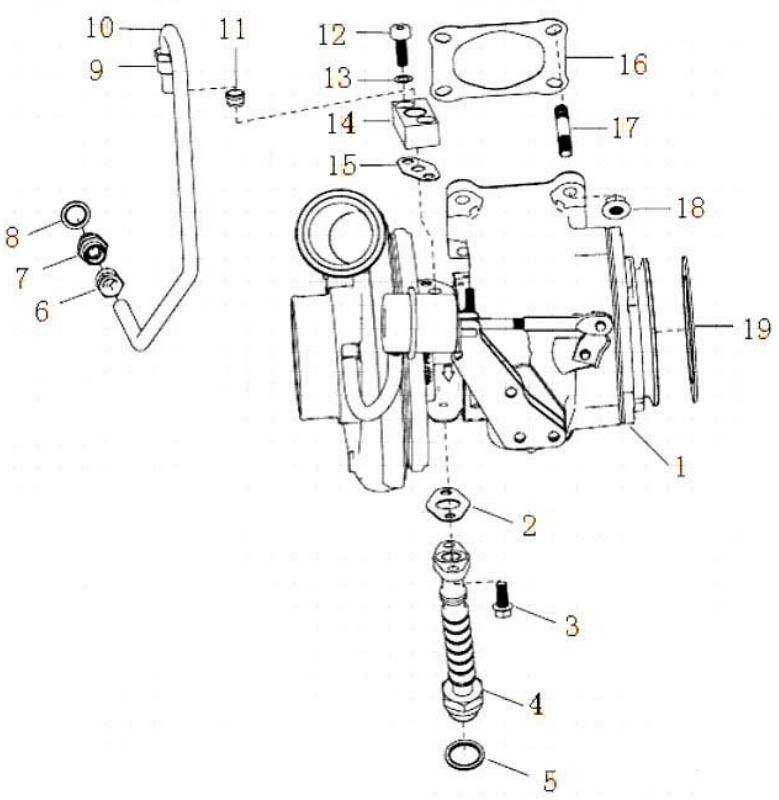

TURBO CHARGER		
Serial	Part Number	Name
1	202V09100-7924	Turbocharger
2	200V96601-0576	Turbocharger return pipe gasket
3	MQ6-03216-8304	Hexagon flange bolts
4	201V05703-5395	Turbocharger oil return pipe
5	MQ6-56631-0111	Composite gasket
6	MQ6-71030-2114	Union nut
7	MQ6-71060-2104	Connector
8	MQ6-56631-0107	Composite gasket
9	190003559513	Union nut
10	201V05702-2913	Tube
11	MQ6-71020-0418	Connector
12	190003862428	Hexagon socket head cap screws
13	VG188250083	Self-locking washers
14	VG1560110152	Inlet pipe flange
15	VG609E110050	Inlet pipe gasket
16	201V08901-0182	Turbocharger gaskets
17	200V90210-0017	Stud
18	MQ6-11229-0023	Hexagon flange nuts
19	202V08901-0210	Outlet gasket

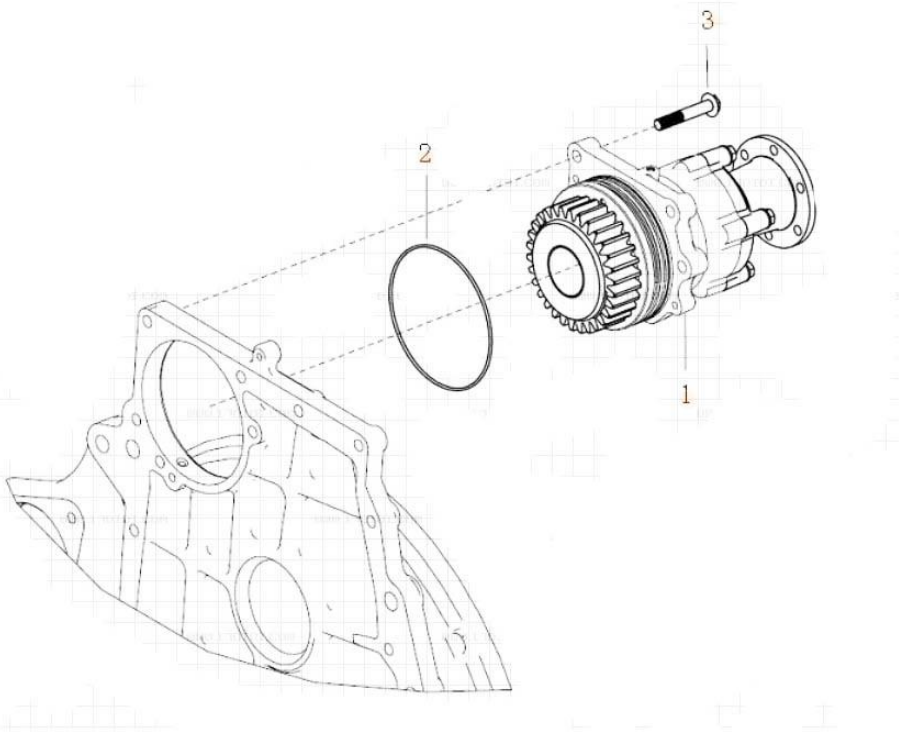

Power Take Off		
Serial	Part Number	Name
1	200-38500-6136	PTO assy
2	200V96501-0598	Sealing ring
3	MQ6-03216-8412	Bolt

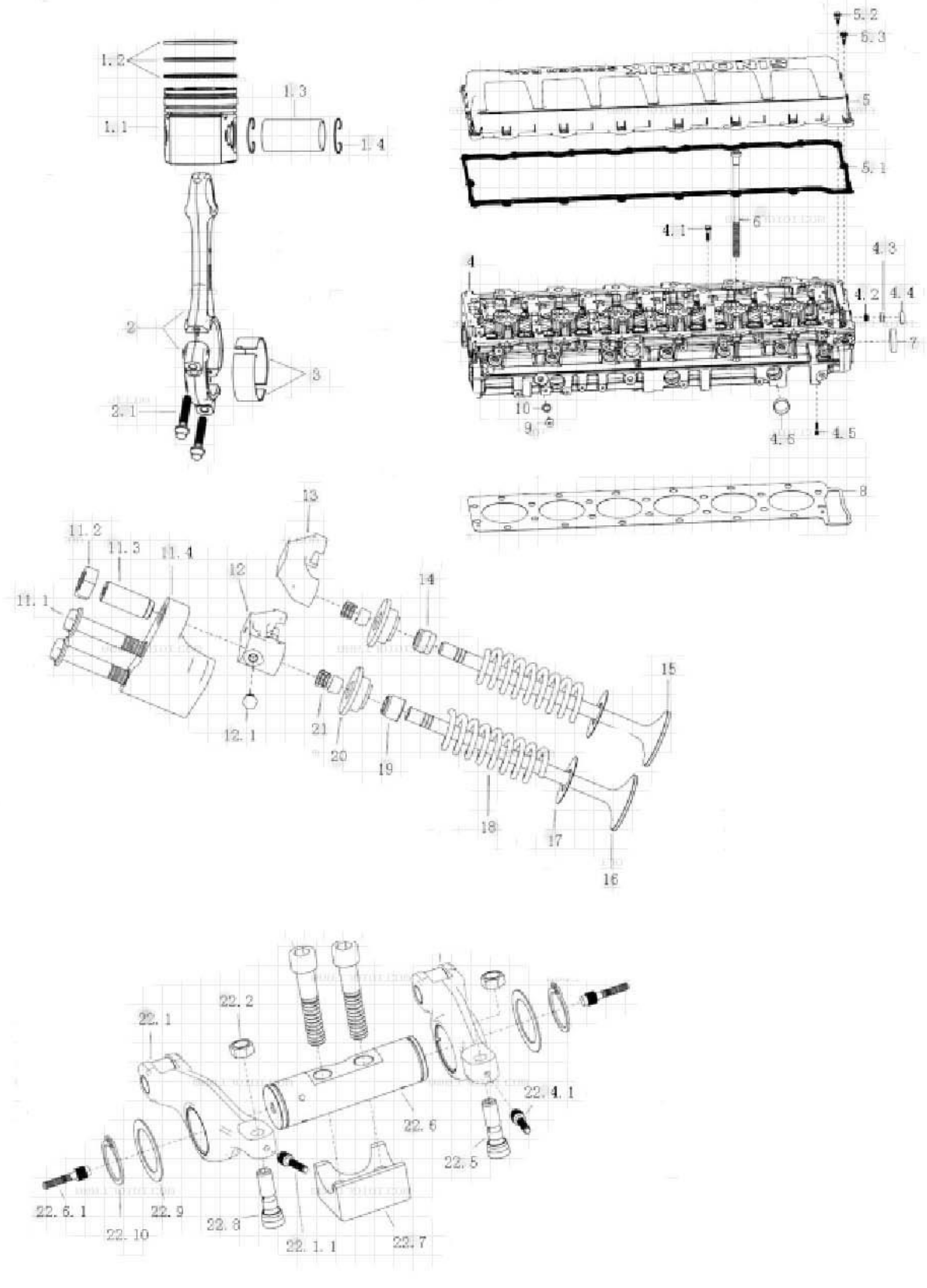
1.2
1.3
1.1
1.4
2
3
2.1
5.2
5.3
5
5.1
4.1
6
4.3
4
4.2
4.4
7
10
9
4.6
4.5
8
13
11.2
11.3
11.4
12
14
11.1
15
12.1
21
20
19
18
17
16
22.2
22.1
22.4.1
22.6
22.5
22.6.1
22.9
22.10
22.8
22.1.1
22.7

Connecting Rod, Piston & Valve Mechanism		
Serial	Part Number	Name
	201V02500-6126	D20 piston kit
1.1	200V02511-0771	piston
1.2	201V02503-6001	Ring Assembly
1.3	200V02502-0120	Piston pin
1.4	200V90810-0038	Piston pin retaining ring
2	201-02400-6120	Rod assembly
2.1	200V90490-0133	Rod bolt
3	201V02410-6698	Connecting rod bearing
4	200-03100-6423	Cylinder head assembly 70HZ
4.1	MQ6-03215-6307	Hexagon flange bolts Q186-M8X35-8.8-MAN183-PHR
4.2	200V90310-0272	Plugs
4.3	200V91606-0040	Bowl plug 25,20
4.4	200V91606-0036	Bowl plug 32,30
4.5	MQ6-21649-0003	Sealing plug 6X5
4.6	200V91606-0090	Bowl plug 40, 15
5	201V03401-6024	Cylinder head cover assembly
5.1	201V03905-0177	Cylinder head cover gasket
5.2	201V96210-0087	Bolt sleeve assembly
5.3	201V96210-0080	Bolt assemblies damping element
6	200V90020-0421	Head bolt
7	200V91606-0063	Bowl plug 63,10
8	201V03901-0403	Cylinder head gasket
9	MQ6-08049-0032	Plugs
10	MQ6-56631-0107	Composite gasket BS-16,7 X24,0 -ST / FPM1-80
	200-04251-6000	EVB platen assembly
11.1	MQ6-03216-8412	Hexagon flange bolts Q186-M10X60-10.9-MAN183-B1
11.2	200V90501-0083	Hex nut M14X1
11.3	200V04205-0044	Adjusting screw
11.4	200V04251-0006	EVB platen
12	200V04120-6008	EVB valve bridge assembly
12.1	200V90001-0216	Hex head bolt M6X0,75X5,5
13	200V04120-0019	Valve bridge
14	202V04902-0033	Intake valve rod seals
15	200V04101-0574	Intake valve
16	200V04101-0546	Exhaust valve
17	200V90701-0243	Spacer
18	200V04102-0159	Valve spring
19	202V04902-0035	Valve rod seals
20	200V04103-0108	Valve spring retainer
21	200V04104-0034	Air lock folder

	201-04200-6057	Rocker mechanism
22.1	202-04201-6004	Exhaust rocker arm assembly
22.1.1	MQ6-21649-0005	Sealing plug 4X3,7
22.2	200V90501-0030	Hex nut M10X1
22.3	MQ6-02191-0616	Hexagon socket head cap screws
22.4	202-04201-6003	Intake rocker arm assembly
22.4.1	MQ6-21649-0005	Sealing plug 4X3,7
22.5	200V04205-5010	Adjusting screw
22.6	200-04203-5065	Rocker shaft assembly
22.6.1	MQ6-21649-0003	Sealing plug 6X5
22.7	200V04202-0136	Rocker seat
22.8	200V04205-0045	Adjusting screw
22.9	200V90701-0234	washer
22.1	MQ6-29010-0126	Shaft circlip 32X1,5

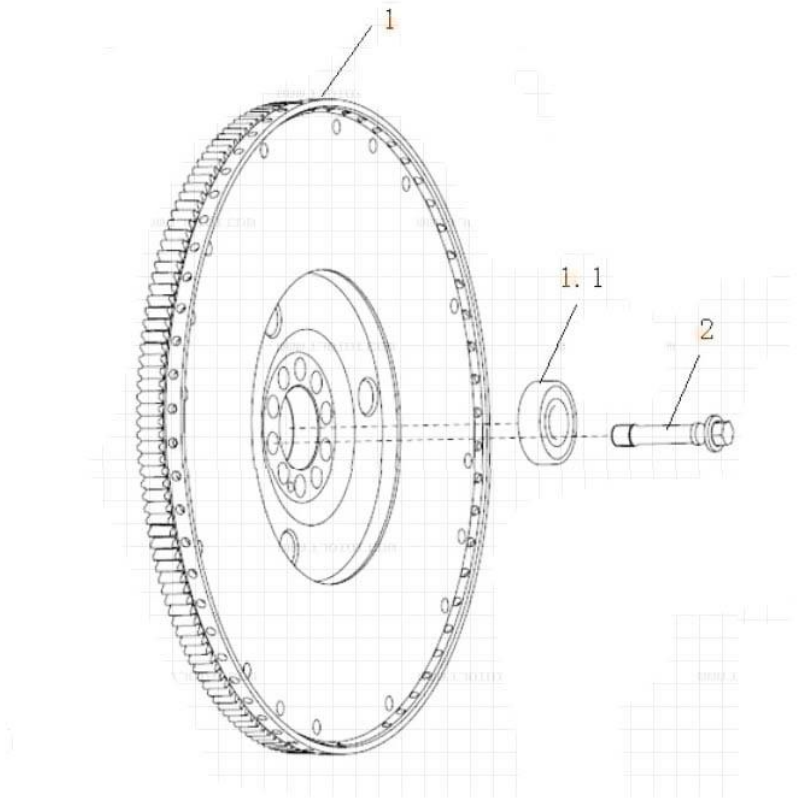

FLYWHEEL		
Serial	Part Number	Name
1	201-02301-6085	Flywheel
1.1	200V93410-0143	Ball bearing
2	200V90020-0419	Flywheel bolt

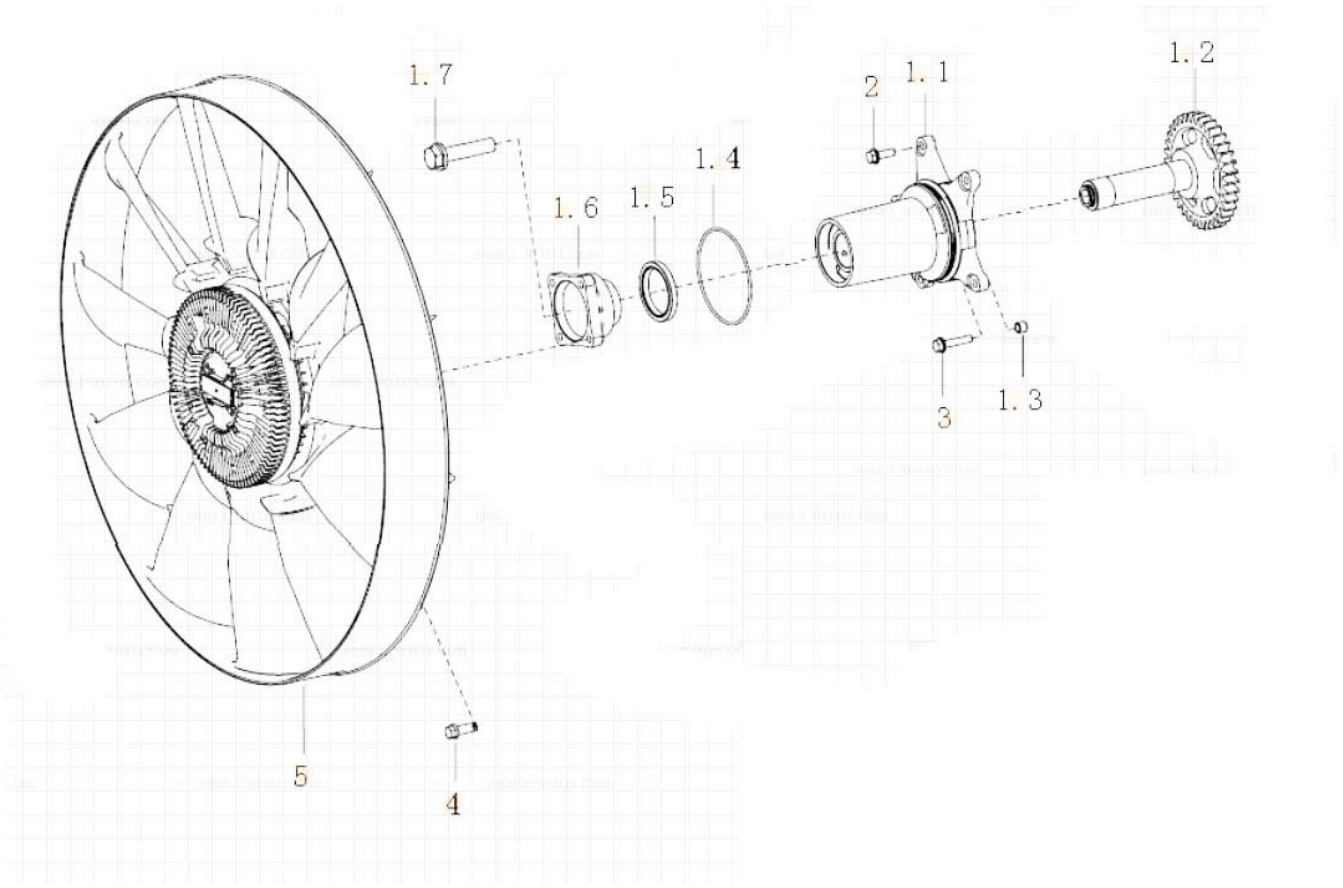

Fan		
Serial	Part Number	Name
	201-06600-6100	Fan bracket assembly
1.1	201V06609-5006	Fan tray housing
1.2	200-06603-5004	Fan bracket shaft assembly
1.3	200V91701-0904	Positioning bushings
1.4	MQ6-56939-0068	O-ring 108X3 N -FPM 1-70-BES
1.5	201V96501-0573	Seal
1.6	200V06604-0084	Fan hub
1.7	200V90001-5004	Hex head bolt and washer assemblies
2	MQ6-03216-8305	Hexagon flange bolts Q186-M8X25-10.9-MAN183-B1
3	MQ6-03216-8308	Hexagon flange bolts Q186-M8X40-10.9-MAN183-B1
4	MQ6-02202-4203	Hexagonal head shoulder bolt M10X25-MAN183-B1
5	202V06600-7025	Viscous Fan

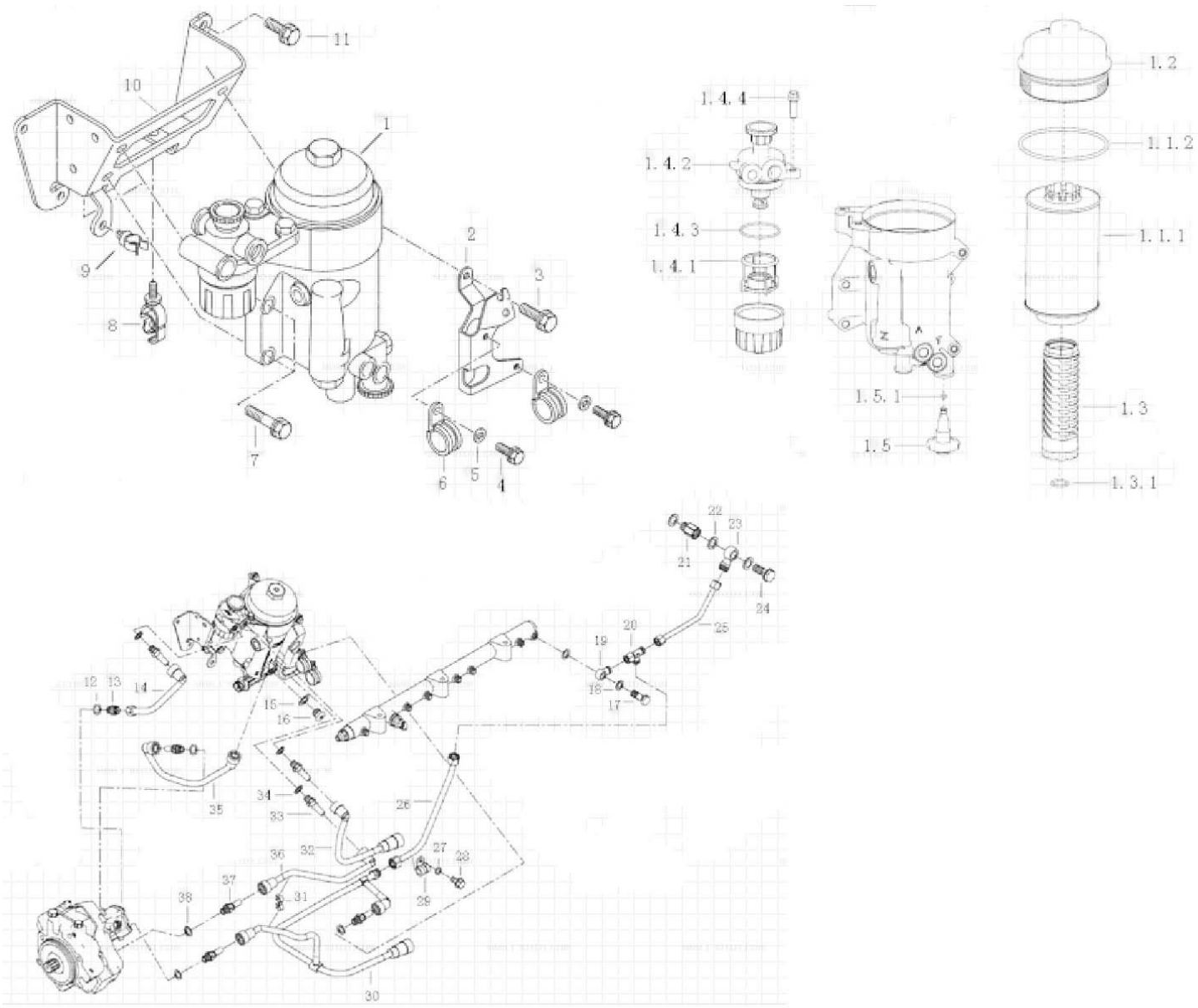

Fuel Filter		
Serial	Part Number	Name
1	201V12501-7289	Fuel filter (without heater)
1.1	201V12503-0061	Core fuel filter with O-ring
1.1.1	201V12503-0063	Fine filter cartridge
1.1.2	200V96501-0581	O-ring D100 + -0,84XD4 + -0,13 HNBR60 + -5 SHORE A
1.2	201V12504-0030	Filter cover with O-ring
1.2.1	200V96501-0581	O-ring D100 + -0,84XD4 + -0,13 HNBR60 + -5 SHORE A
1.3	201V12503-0082	Fuel filter holder with O-ring
1.3.1	200V96501-0621	O-ring 18X2,5 FPM 60 SHORE
1.4	201V12150-0002	Hand pump with bolts

1.4.1	201V12503-0084	Hand pump filter with O-ring 100 MYM
1.4.1.1	201V12503-0083	Hand pump filter 100 MYM
1.4.1.2	200V96501-0604	O-Ring 50 X 2,5 HNBR
1.4.2	201V12502-0014	Hand oil pump cover with O-ring
1.4.2.1	200V96501-0604	O-Ring 50 X 2,5 HNBR
1.4.3	200V96501-0604	O-Ring 50 X 2,5 HNBR
1.4.4	201V90020-0428	Hexagon shoulder bolts SF-M8X25
1.5	201V90310-0268	Drain cock with O-ring
1.5.1	200V96501-0605	O-Ring 4,5 X 2 FPM
2	200V12540-5110	Check valve support
3	MQ6-03216-8304	Hexagon flange bolts Q186-M8X20-10.9-MAN183-B1
4	MQ6-03216-8203	Hexagon flange bolts Q186-M6X16-10.9-MAN183-B1
5	MQ6-15013-0409	Washer GB / T97.1- 6-MAN183-B1
6	MQ6-67300-2525	Retaining clip D1-25X15-W3-EPDM WW CR
7	MQ6-03216-8308	Hexagon flange bolts Q186-M8X40-10.9-MAN183-B1
8	200V97401-0565	Single pipe clamp
9	200V97430-0001	Bellows clamp
10	200-12540-6008	Fuel filter bracket assembly with a pipe clamp
11	MQ6-03216-8303	Hexagon flange bolts Q186-M8X16-10.9-MAN183-B1
12	MQ6-56631-0106	Composite gasket BS-14,7 X22,0 -ST / FPM1-80
13	200V98130-0579	Connector M14X1,5-NW10
14	200V12304-5849	Fuel filter - fuel pump
15	MQ6-56631-0106	Composite gasket BS-14,7 X22,0 -ST / FPM1-80
16	MQ6-08049-0031	Plug M14X1,5-ST-M3360-RK10-K
17	200V98150-0175	Hollow bolt
18	MQ6-56631-0106	Composite gasket BS-14,7 X22,0 -ST / FPM1-80
19	200V98103-0037	Annular connector
20	MQ6-71270-2103	T-joint L10-A4C
21	200V98130-0671	Screw-in connector
22	MQ6-56631-0106	Composite gasket BS-14,7 X22,0 -ST / FPM1-80
23	200V98103-0037	Annular connector
24	200V98150-0175	Hollow bolt
25	200V12305-5298	Injector return pipe - pressure limiting valve
26	200V12305-5364	Return line pressure limiting valve - Reducing fittings
27	MQ6-15013-0411	Washer GB / T97.1-8-200HV-MAN183-B1
28	MQ6-03216-8303	Hexagon flange bolts Q186-M8X16-10.9-MAN183-B1
29	MQ6-67300-1036	Retaining clip D1-10X20-W1-2-EPDM
30	200V12305-5300	Return pipe
31	200V97401-0552	Dual hose clamp
32	200V12304-5848	Fuel strainer inlet pipe
33	200V98130-0458	Screw-fitting M14X1,5 / SAE12
34	MQ6-56631-0106	Composite gasket BS-14,7 X22,0 -ST / FPM1-80

35	200V12304-5850	Fuel pipe pump - Filter
36	200V12304-5851	Fuel pipe filters - high pressure pump
37	200V98130-0458	Screw-fitting M14X1,5 / SAE12
38	MQ6-56631-0106	Composite gasket BS-14,7 X22,0 -ST / FPM1-8

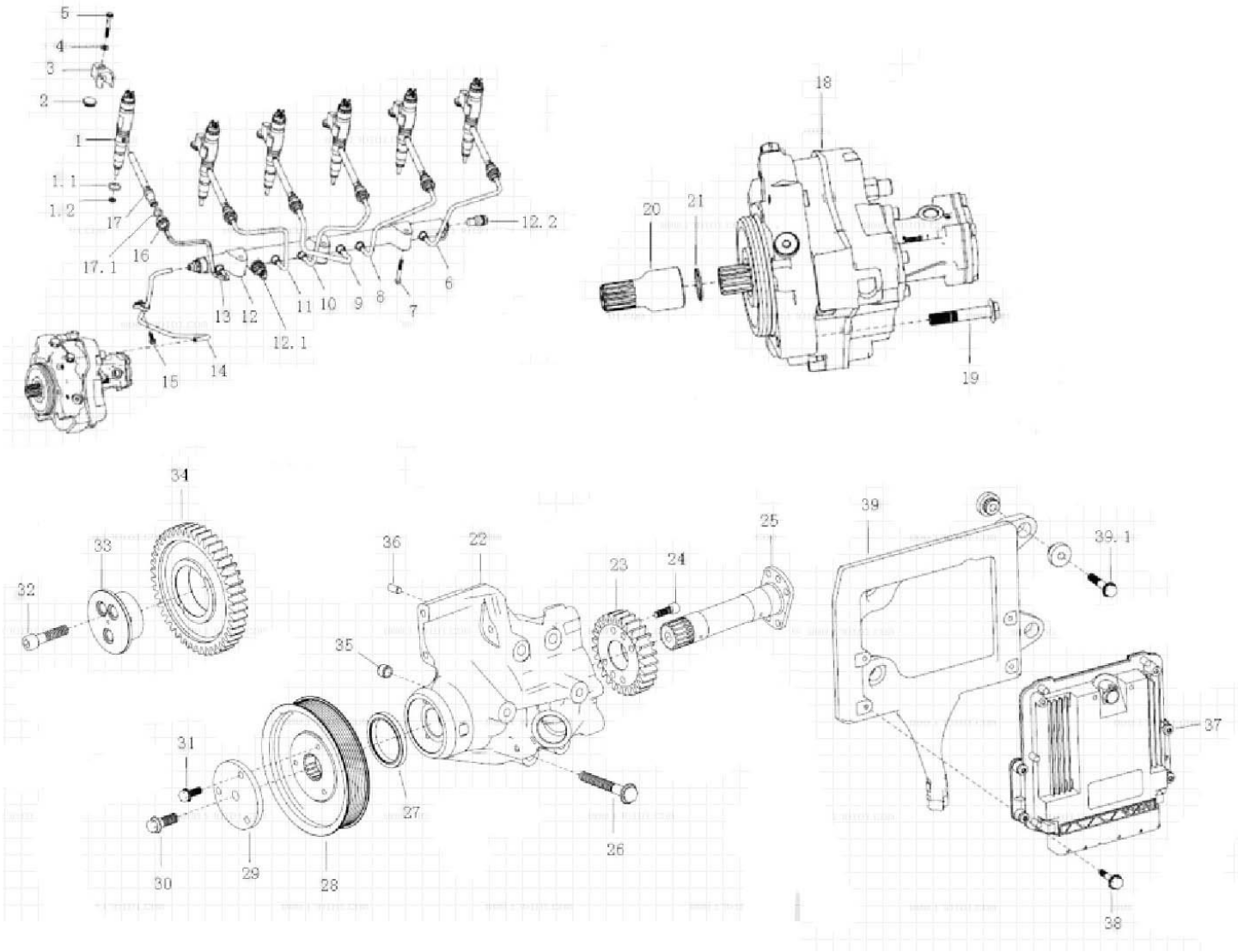

High Pressure Common Rail		
Serial	Part Number	Name
1	200V10100-6126	Injector
1.1	200V96501-0502	O-ring
1.2	200V98701-0139	Injector gasket
2	200V90720-0214	Push the stops
3	200V10104-0065	Injector plate
4	MQ6-15140-2102	Spherical washers
5	MQ6-03216-8310	Hexagon flange bolts
6	201V10304-0323	Pressure tubing
7	MQ6-03216-8310	Hexagon flange bolts
8	201V10304-0322	High-pressure pipeline
9	201V10304-0321	High-pressure pipeline
10	201V10304-0320	High-pressure pipeline
11	201V10304-0319	High-pressure pipeline

12	200V10311-6082	Rail with integrated pressure limiting valve and the throttle valve
12.1	200V27421-0229	Rail pressure sensor
12.2	200V10304-0291	Pressure limiting valve
13	201V10304-0318	High-pressure pipeline
14	201V10301-6189	High-pressure pipeline pumps - Rail
15	MQ6-03216-8303	Hexagon flange bolts
16	200-10303-0999	Compression nut
17	200-10301-6161	Injector into the oil takeover
17.1	200V96501-0532	O-ring for high pressure fittings 13,5X3
18	200V11103-7792	High pressure pump CP3.4 +
19	MQ6-03216-8411	Hexagon flange bolts
20	200V11310-0007	Shaft sleeve
21	MQ6-29029-0199	Hole Spring Collar
22	200-38507-5020	High pressure pump drive housing
23	200-11301-0258	High-pressure oil pump drive gear
24	MQ6-02191-0409	Hexagon socket head cap screws
25	200V38516-5006	transmission shaft
26	MQ6-03216-8516	Hexagon flange bolts
27	201V96501-0573	Seal
28	200V95820-0090	Pulley
29	200V90710-0450	Shaft washer
30	MQ6-03216-8506	Hexagon flange bolts
31	MQ6-03216-8304	Hexagon flange bolts
32	MQ6-02191-0614	Hexagon socket head cap screws
33	200V11302-0053	The front end of the intermediate gear shaft
34	200-11306-5007	The front end of the intermediate gear
35	200V91701-0894	Positioning bushings
36	MQ6-22022-3061	Cylindrical pin
37	202V25803-7915	EDC- control unit
38	MQ6-03216-8206	Hexagon flange bolts
39	202V11640-6014	ECU bracket assembly
39.1	MQ6-02829-0025	Hexagon flange bolts

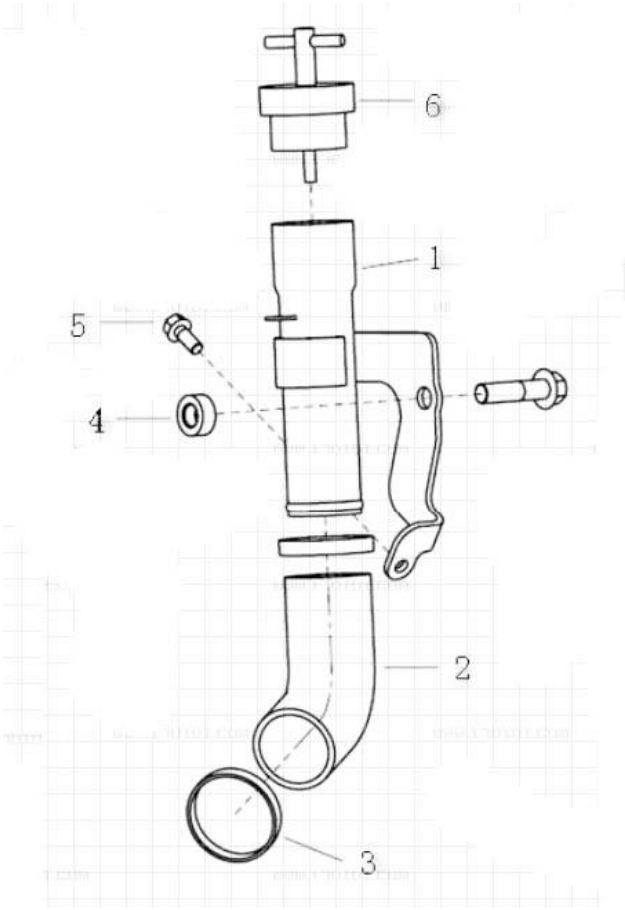

OIL FEED PIPE		
Serial	Part Number	Name
1	812W01810-6018	Oil filler pipe assembly
2	812W01810-0034	Hose
3	190003989306	Hose clamps
4	812W90710-0326	Spacer
5	MQ6-03215-8304	Hexagon flange bolts Q186-M 8X20-8.8-MAN183-B1
6	WG2600010489	Fuel hose cover assembly

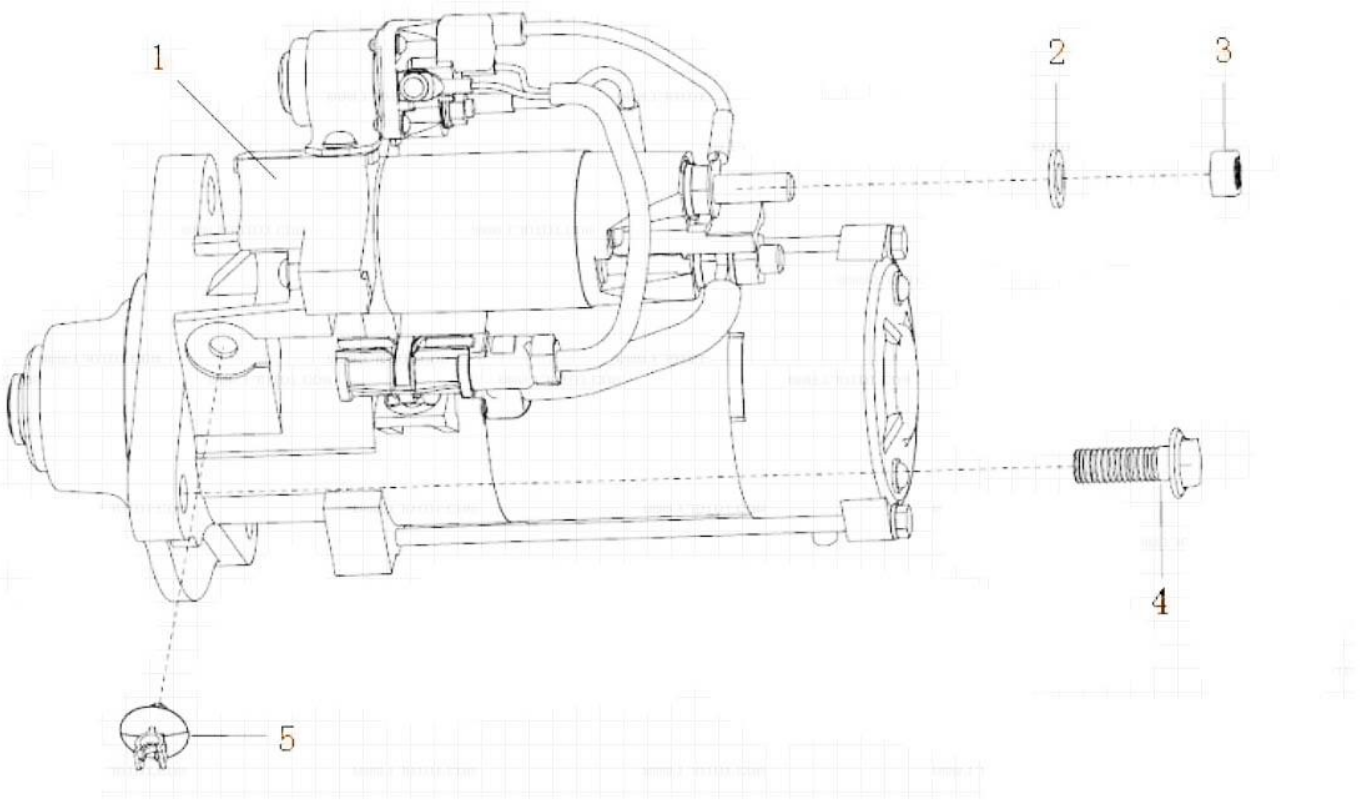

STARTER		
Serial	Part Number	Name
1	200V26201-7199	90P55 24V starter
2	MQ6-15016-0312	Washer
3	MQ6-11181-0115	Nut
4	MQ6-03216-8507	Hexagon flange bolts
5	200V97430-0005	Wave tube clip DN4,5

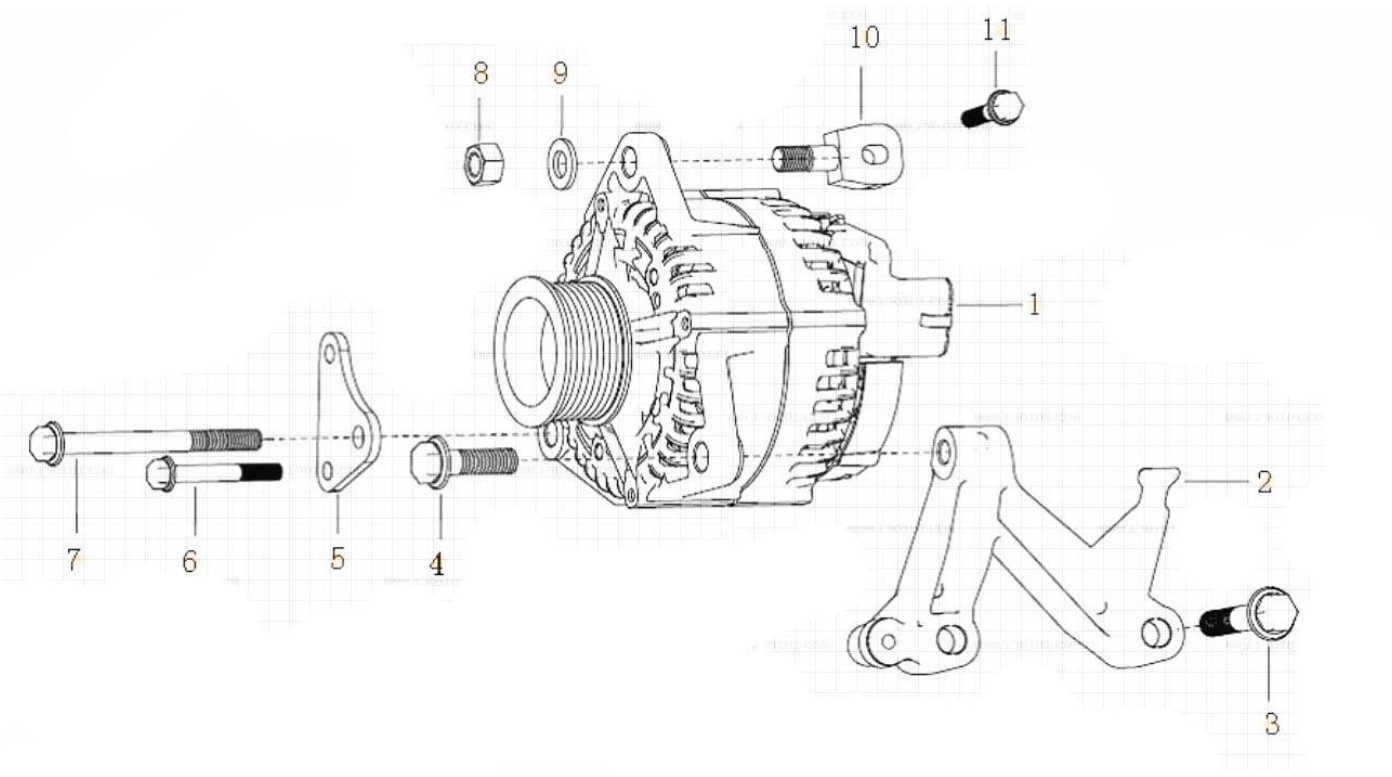

GENERATOR		
Serial	Part Number	Name
1	202V26101-7271	Generator 28V / 80a
2	200V19101-0307	Generator bracket
3	MQ6-03215-8512	Hexagon flange bolts
4	MQ6-03216-8511	Hexagon flange bolts
5	200V19101-0357	Generator bracket
6	MQ6-03216-8312	Hexagon flange bolts
7	MQ6-03216-8418	Hexagon flange bolts
8	MQ6-11064-2116	Nut
9	MQ6-15013-0413	Washer
10	200V19101-0368	Generator bracket
11	MQ6-03216-8307	Hexagon flange bolts

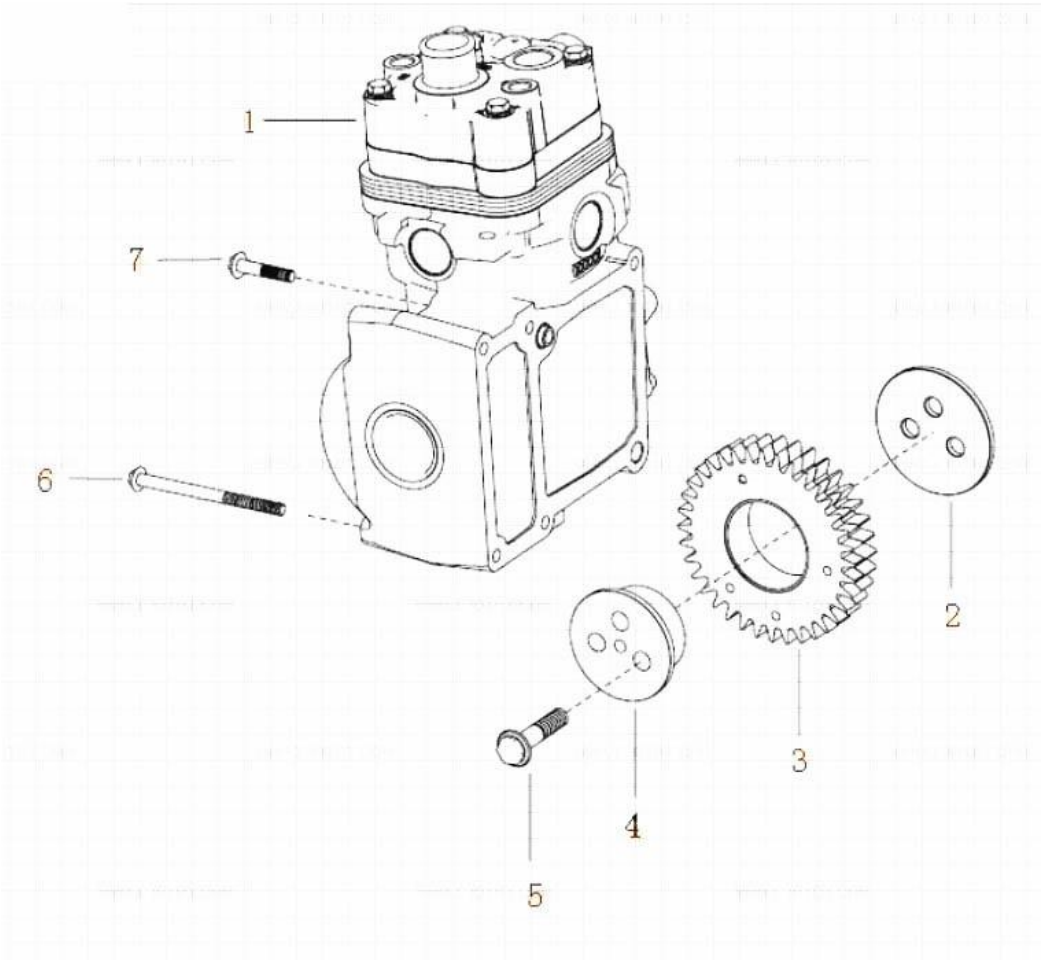

AIR COMPRESSOR		
Serial	Part Number	Name
1	201V54100-7121	Single-cylinder air compressor
2	200V90720-0208	Retaining gasket
3	200-54210-6042	Compressor intermediate gear assembly
4	200V54210-0172	Compressor intermediate gear shaft
5	MQ6-03216-8511	Hexagon flange bolts
6	MQ6-03216-8318	Hexagon flange bolts
7	MQ6-03216-8308	Hexagon flange bolts

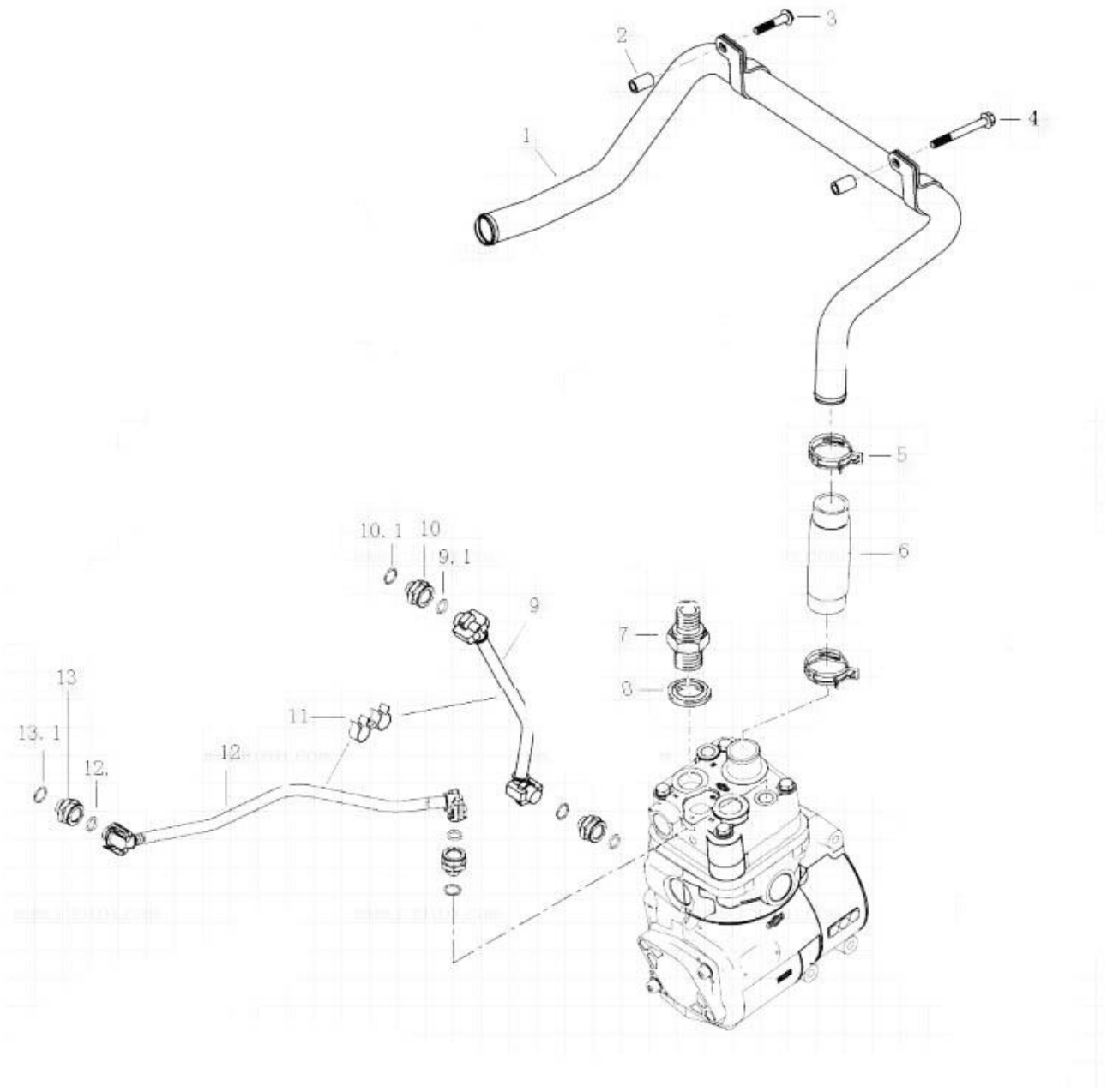

AIR COMPRESSOR CONNECTING PART		
Serial	Part Number	Name
1	202V54120-5342	Air compressor intake pipe
2	VG1043130004	Fixed block
3	MQ6-03216-8308	Hexagon flange bolts
4	MQ6-03216-8314	Hexagon flange bolts
5	MQ6-67420-1244	Flexible steel clamp
6	202V96305-0046	Molded hose

7	MQ6-71251-2705	Connector
8	MQ6-56631-0112	Composite sealing gasket
9	200V06303-5838	Compressor cooling water inlet pipe
9.1	200V96501-0568	Annular seal
10	200V98181-6018	Screw-through connector
10.1	200V96501-0571	O-ring
11	200V97401-0552	Dual hose clamp
12	200V06303-5460	Compressor cooling return pipe
12.1	200V96501-0568	Annular seal
13	200V98181-6018	Screw-through connector
13.1	200V96501-0571	O-ring

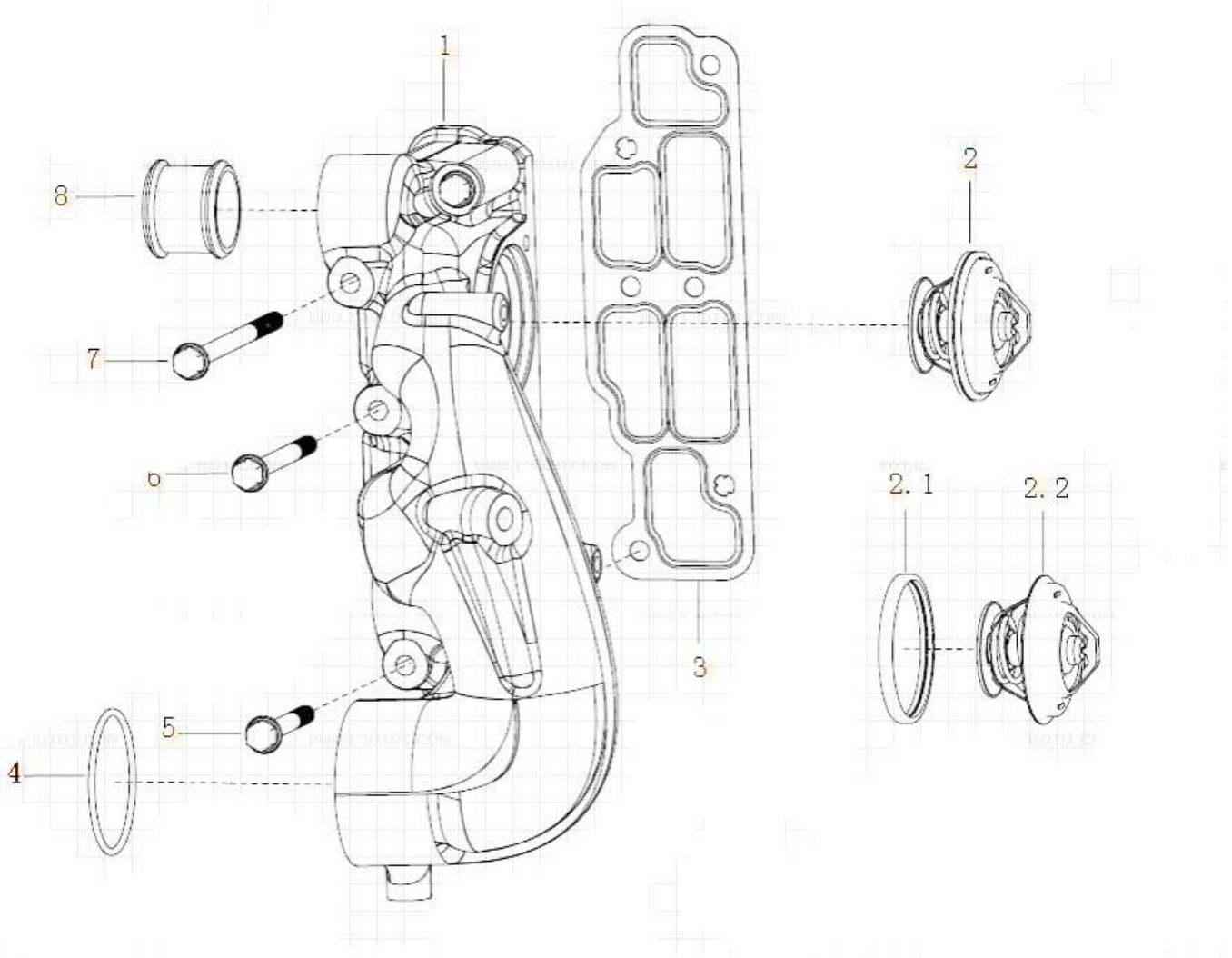

THERMOSTAT		
Serial	Part Number	Name
1	200V06404-0083	Thermostat housing
2	201V06402-6005	Thermostat 83 ℃ ~ 95 ℃
2.1	201V06904-0049	Thermostat seal
2.2	201V06402-0111	Thermostat core 83 ℃ ~ 95 ℃
3	201V06904-0042	Thermostat housing gasket
4	MQ6-56939-0079	O-ring
5	MQ6-03216-8313	Hexagon flange bolts
6	MQ6-03216-8316	Hexagon flange bolts
7	MQ6-03216-8320	Hexagon flange bolts
8	200V98182-0003	Pipe

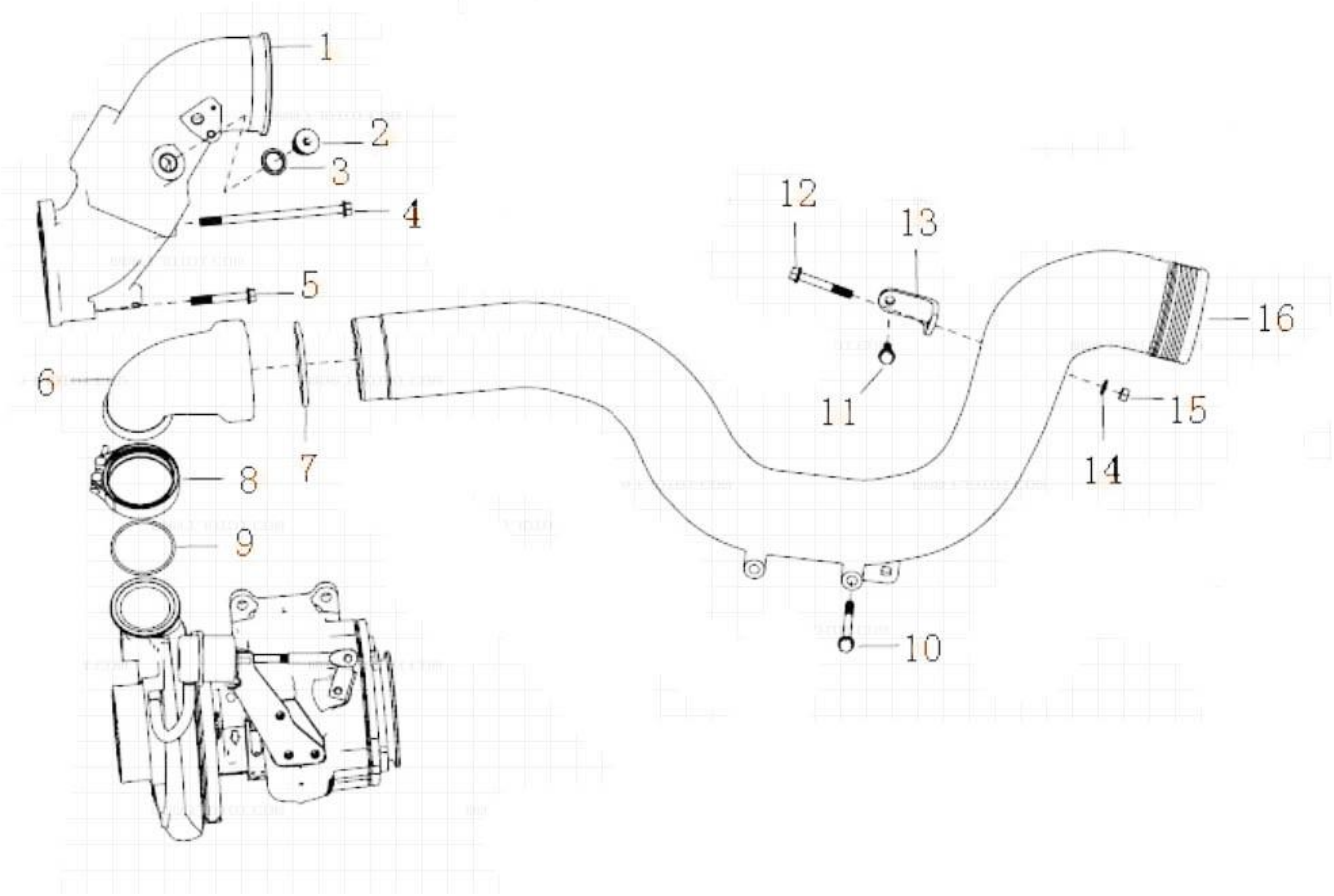

TURBO AIR SYSTEM		
Serial	Part Number	Name
1	202V09411-0868	Intercooler rear intake pipe
2	MQ6-08042-0206	Plugs
16	201V09411-5173	Intercooler front intake pipe
15	MQ6-11064-2114	Screw nut
14	MQ6-15013-0411	Washer
13	200V97485-0555	Support
12	MQ6-03216-8312	Hexagon flange bolts
11	MQ6-03216-8305	Hexagon flange bolts
10	MQ6-03216-8416	Hexagon flange bolts
9	MQ6-56936-2479	O-ring
8	202V97455-0076	V-shaped clamps
7	MQ6-56936-3004	O-ring
6	201V09411-0664	Intake pipe
5	MQ6-03216-8312	Hexagon flange bolts
4	202V03216-8322	Hexagon flange bolts
3	MQ6-56631-0121	Composite sealing gasket

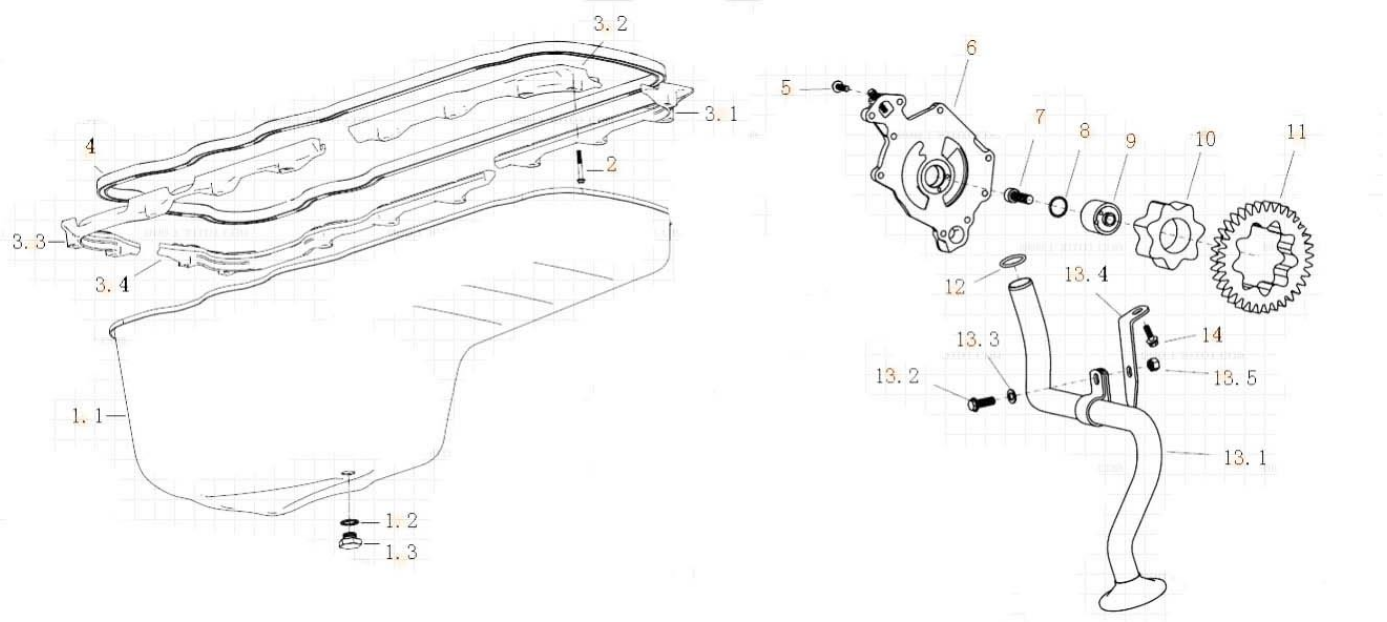

OIL PAN		
Serial	Part Number	Name
	201V05800-6370	Oil pan
1.1	201V05801-5741	Oil pan component
1.2	MQ6-56631-0110	Combination gasket
1.3	MQ6-08042-0207	Plugs
2	MQ6-03216-8310	Hexagon flange bolts
3.1	200V05840-0126	Oil pan support
3.2	200V05840-0139	Oil pan support
3.3	200V05840-0128	Oil pan support
3.4	200V05840-0129	Oil pan support
4	200V05904-0212	Oil pan gasket
5	MQ6-03216-8204	Hexagon flange bolts
6	200V05103-5036	Oil pump cover
7	MQ6-02191-0511	Hexagon socket head cap screws
8	MQ6-56936-1150	O-ring
9	200V05105-5000	Internal oil pump rotor shaft
10	200V05104-0234	Oil pump inner rotor
11	200V05104-0251	Oil pump outer rotor
12	MQ6-56333-3363	O-ring
13	200V05701-6055	Suction pipe assembly
13.1	200V05703-5364	Suction tube assembly
13.2	MQ6-03216-8305	Hexagon flange bolts
13.3	200V90710-0080	washer
13.4	200V05740-0174	Suction pipe bracket
13.5	MQ6-11240-0404	Hexagon nuts
14	MQ6-03216-8303	Hexagon flange bolts

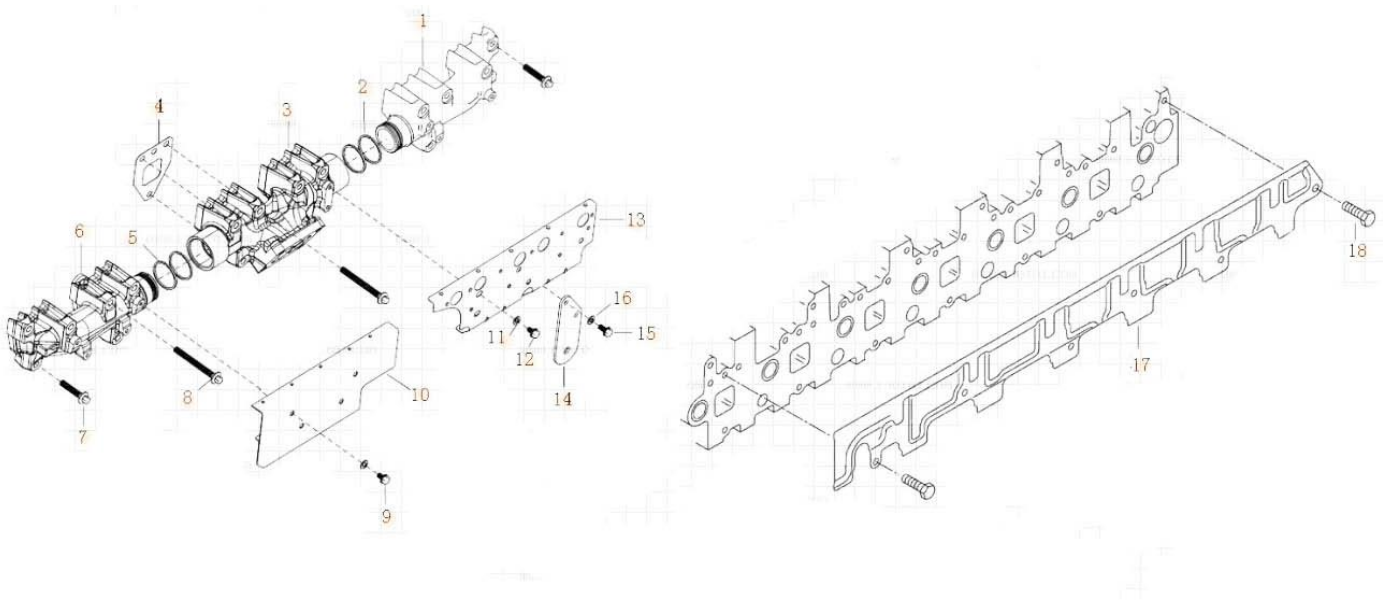

EXHAUST SYSTEM		
Serial	Part Number	Name
1	200V08102-0116	Front exhaust manifold
2	200V98701-0120	Exhaust pipe sealing ring
3	200V08102-0234	The exhaust manifold
4	201V08901-0284	Exhaust pipe gasket
5	200V98701-0120	Exhaust pipe sealing ring
6	200V08102-0189	After the exhaust manifold
7	200V90490-0051	Heat bolt M10X50
8	200V90490-0032	Heat bolt M10X95
9	MQ6-01289-0274	Hex head bolt
10	201V08120-5286	4-6 cylinder insulation board
11	MQ6-15013-0411	washer
12	MQ6-01289-0274	Hex head bolt
13	201V08120-5276	1-3 cylinder insulation board
14	VG1092110148	Air filter holder plate
15	MQ6-01289-0266	Hex head bolt
16	MQ6-15013-0411	washer
17	201V08120-0403	Insulation panels - Head
18	MQ6-03215-8403	Hexagon flange bolts

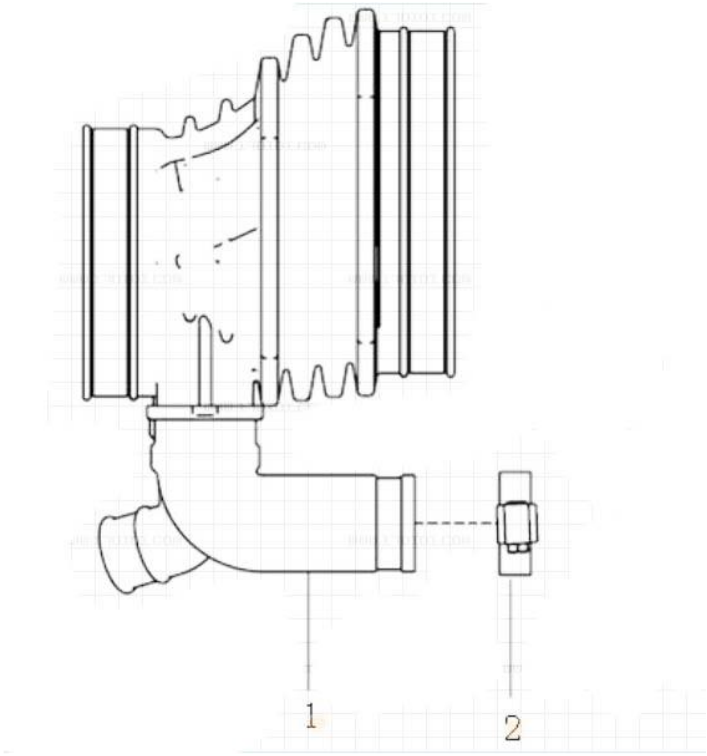

INTAKE PIPE CONNECTOR		
SINOTRUK MC11 ENGINE CATALOG		
Serial	Part Number	Name
1	202V09402-0189	Intake connecting pipe
2	190003989315	Soft pipe clamp

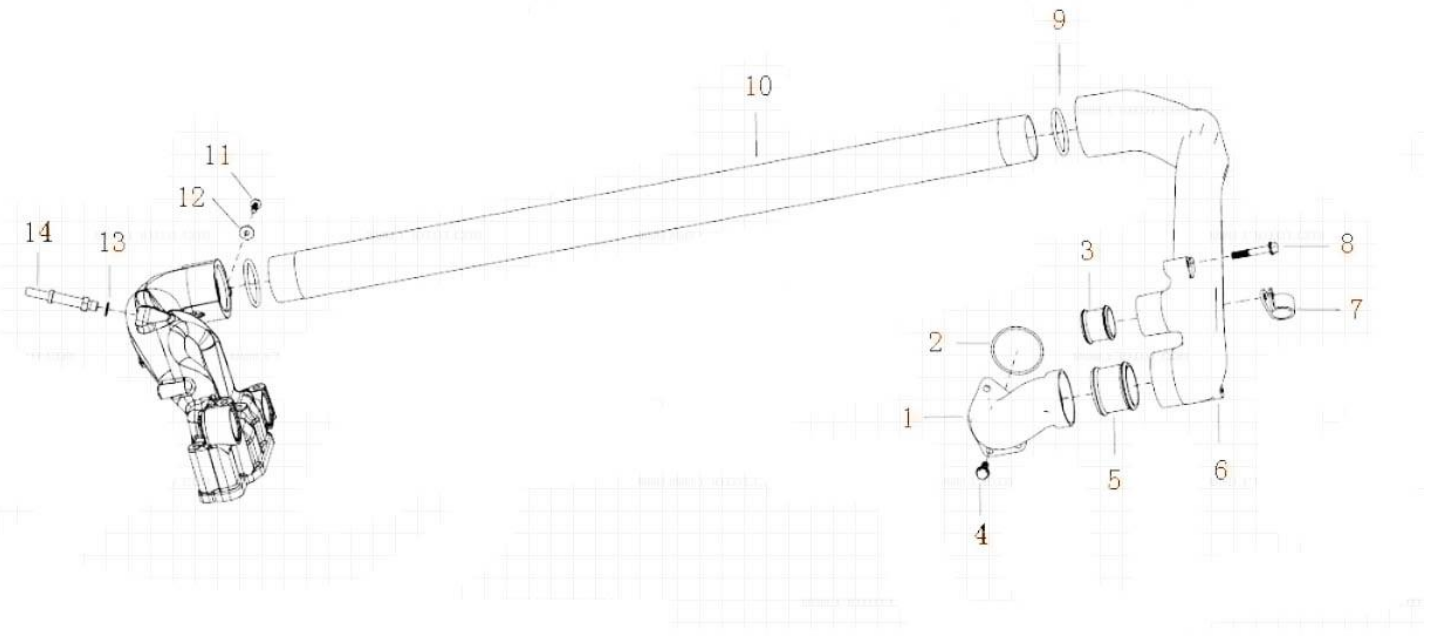

COOLANT PIPE		
SINOTRUK MC11 ENGINE CATALOG		
Serial	Part Number	Name
1	200V06302-0657	Coolant elbow pipe
2	MQ6-56936-2423	O-ring
3	200V98182-0050	Plug takeover
4	MQ6-03216-8305	Hexagon flange bolts
5	200V98182-0026	Plug takeover
6	201V06302-0759	Coolant elbow pipe
7	810W97401-0682	Pipe clamps
8	MQ6-03216-8310	Hexagon flange bolts
9	MQ6-56939-0079	O-ring
10	200-98182-0089	Water
11	MQ6-03216-8204	Hexagon flange bolts
12	MQ6-15193-0307	Large Washer
13	MQ6-56631-0105	Composite sealing gasket
14	200V98131-0223	Hose fittings

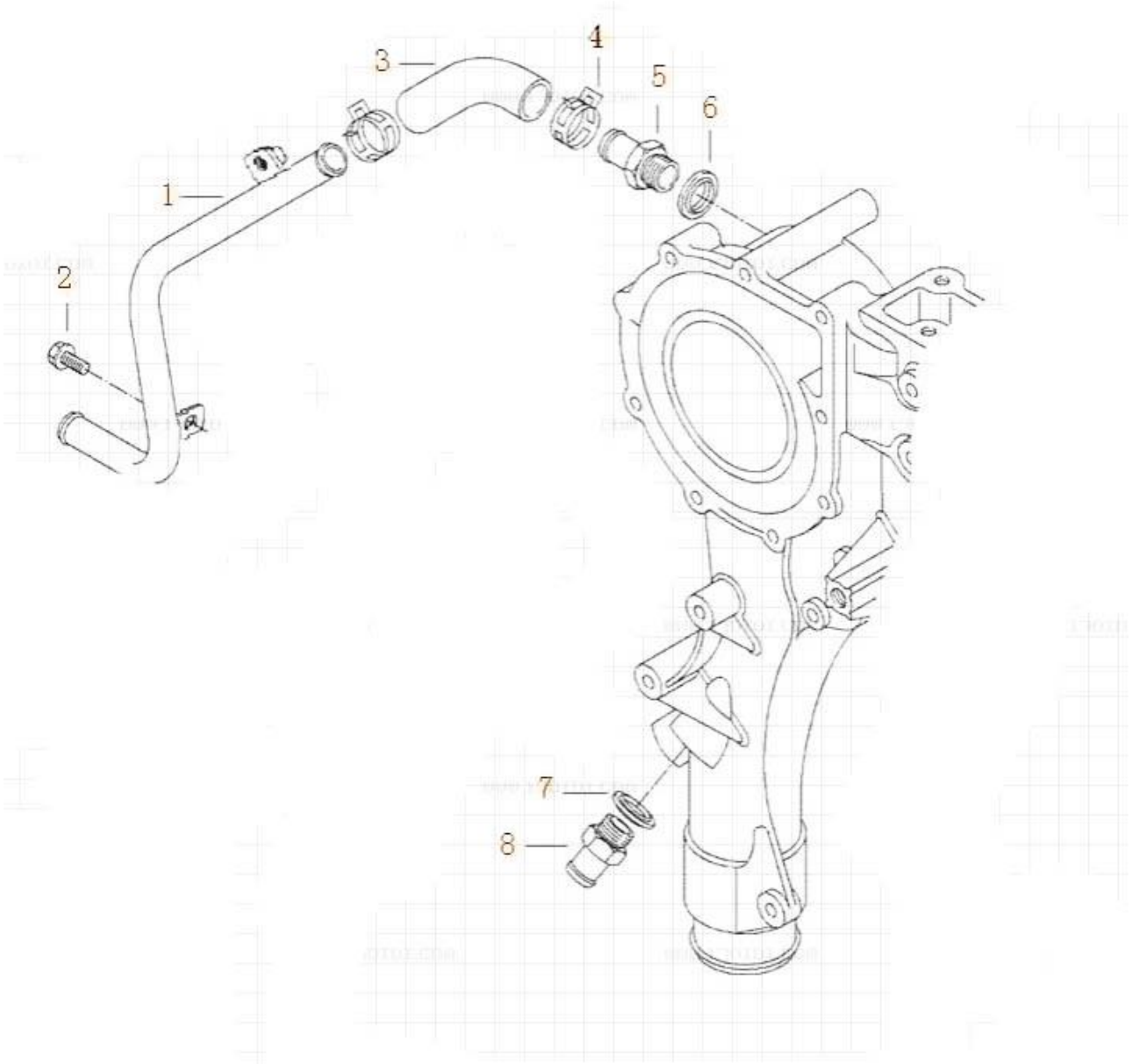

CABIN HEATING PIPE		
Serial	Part Number	Name
1	200V06303-5534	Heater inlet pipe
2	MQ6-03216-8304	Hexagon flange bolts
3	810W96305-0200	Molded hose
4	MQ6-67420-1226	Flexible steel clamp
5	200V98131-0049	Hose fittings
6	MQ6-56631-0110	Composite sealing gasket
7	MQ6-56631-0110	Composite sealing gasket
8	202V98131-0001	Annular connector
	202V98131-0002	Hollow bolt