SINOTRUK

MC11 ENGINE

SPARE PARTS CATALOG

Part -II

https://www.sinosoon.com Email:market@sinosoon.com

INDEX

OIL GAUGE	PAGE 3
ENGINE SUPPORT	PAGE 4
ENGINE HANGER	PAGE 5
INTERCOOLER INTAKE COVER	PAGE 6
CRANKSHAFT VENTILATION CASE	PAGE 7
EXAUST PIPE	PAGE 8
COOLANT EXHAUST PIPE	PAGE 9
AC COMPRESSOR	PAGE 10
ENGINE SURVAILLANCE	PAGE 11
ECU CABLE	PAGE 12

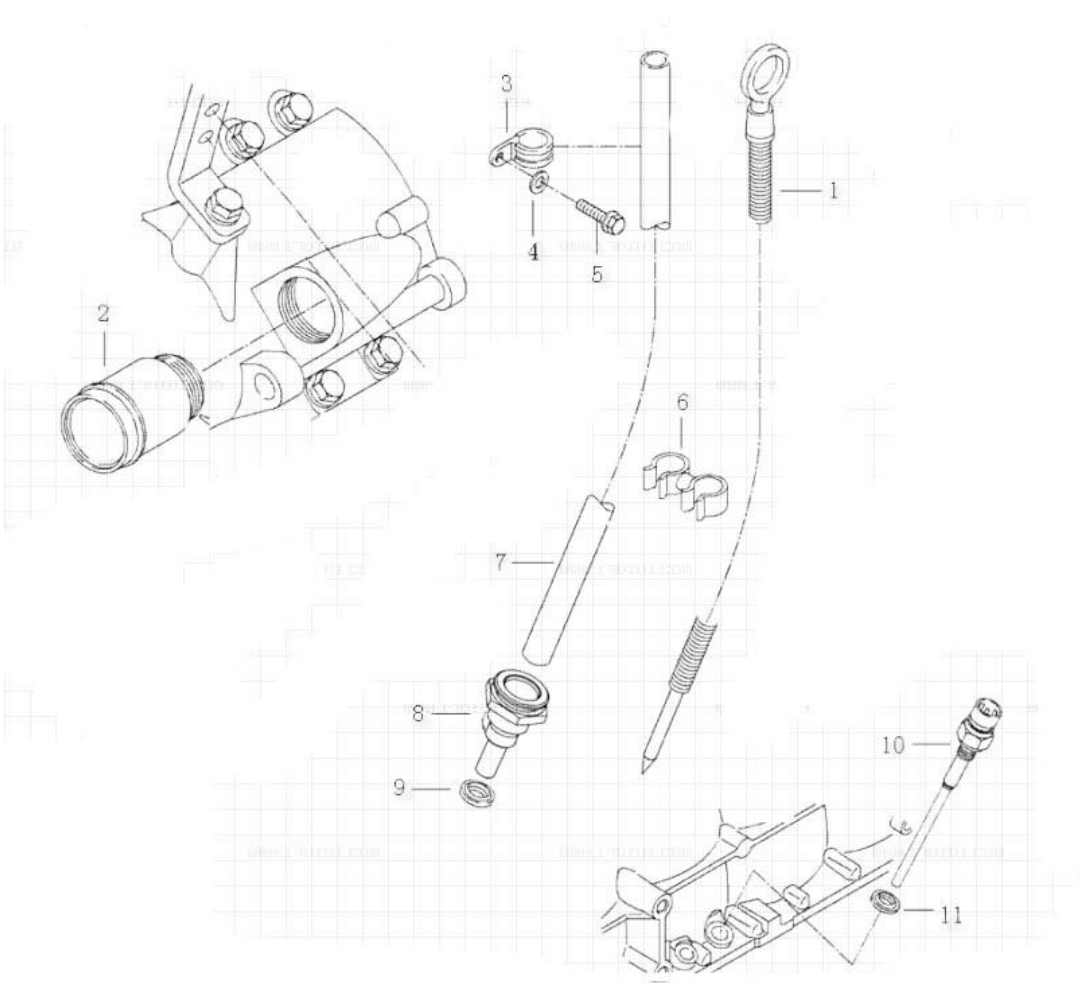

OIL GAUGE		
Serial	Part Number	Name
1	200V05805-5784	Oil gauge
2	200V01810-0043	Oil feeding pipe
3	MQ6-67399-0005	Securing clip
4	MQ6-15013-0411	washer
5	MQ6-03216-8303	Hexagon flange bolts
6	200V97401-0552	Dual hose clamp
7	202V05806-5199	Oil gauge pipe
8	202V98181-0004	Transition joints
9	MQ6-56631-0106	Composite sealing gasket
10	MQ6-08042-0206	Plugs
11	MQ6-56631-0121	Composite sealing gasket

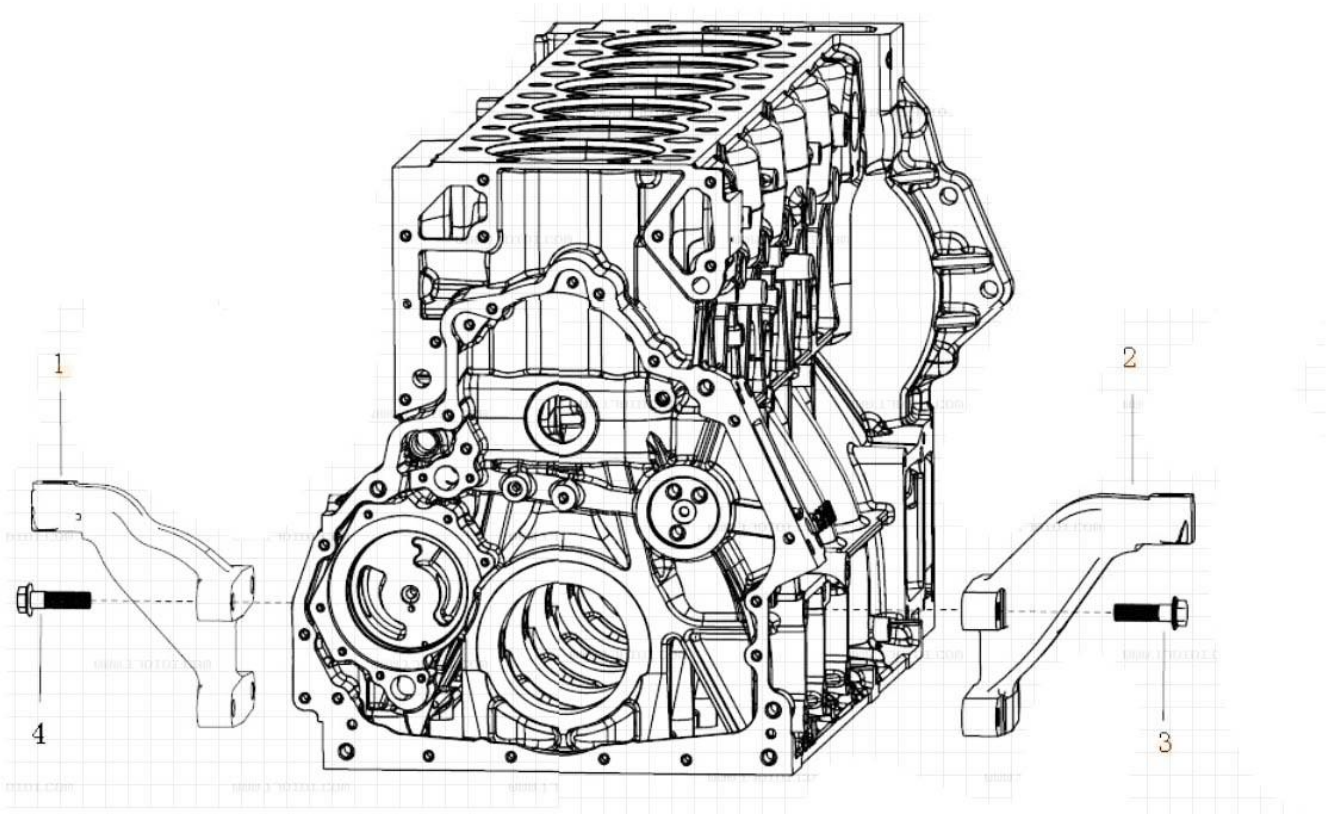

ENGINE SUPPORT		
SINOTRUK MC11 ENGINE CATALOG		
Serial	Part Number	Name
1	200V41501-0119	Front left support
2	200V41501-0118	Front right support
3	MQ6-02812-4615	Hex bolt
4	MQ6-02812-4615	Hex bolt

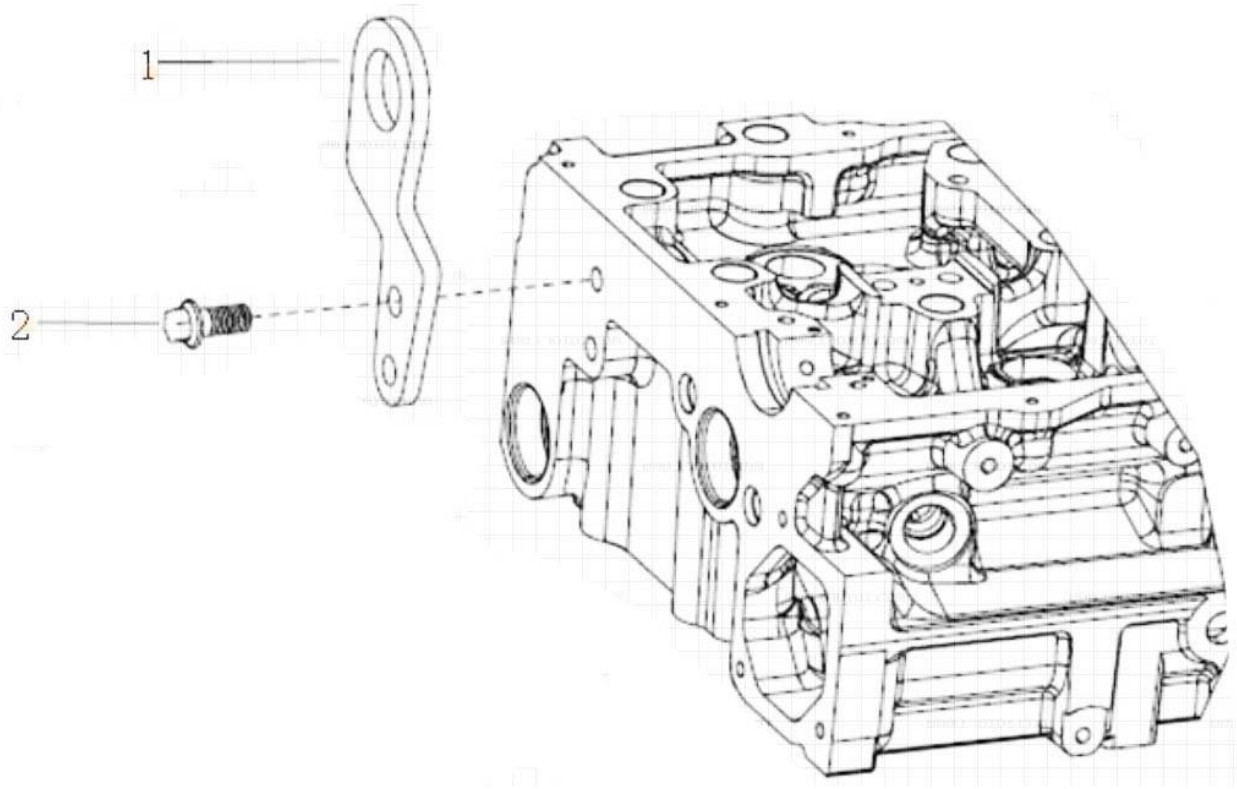

ENGINE HANGER		
SINOTRUK MC11 ENGINE CATALOG		
Serial	Part Number	Name
1	200V19202-0197	Front hanger
2	MQ6-03216-8505	Hex bolt

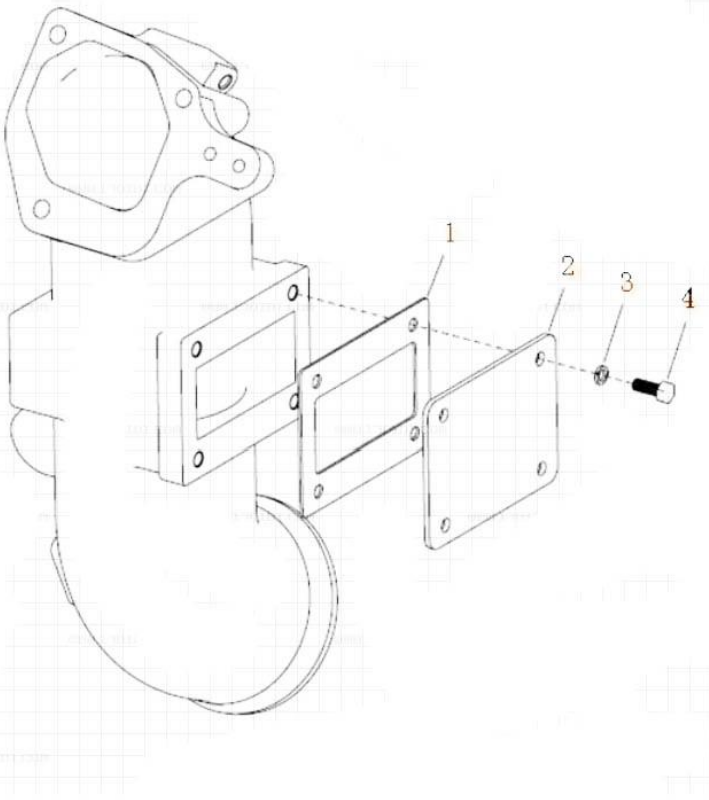

INTERCOOLER INTAKE COVER		
SINOTRUK MC11 ENGINE CATALOG		
Serial	Part Number	Name
4	Q150B0616	Hex bolt
3	Q40306	Gasket
2	202V08901-0188	Cover
1	202V08901-0189	Gasket

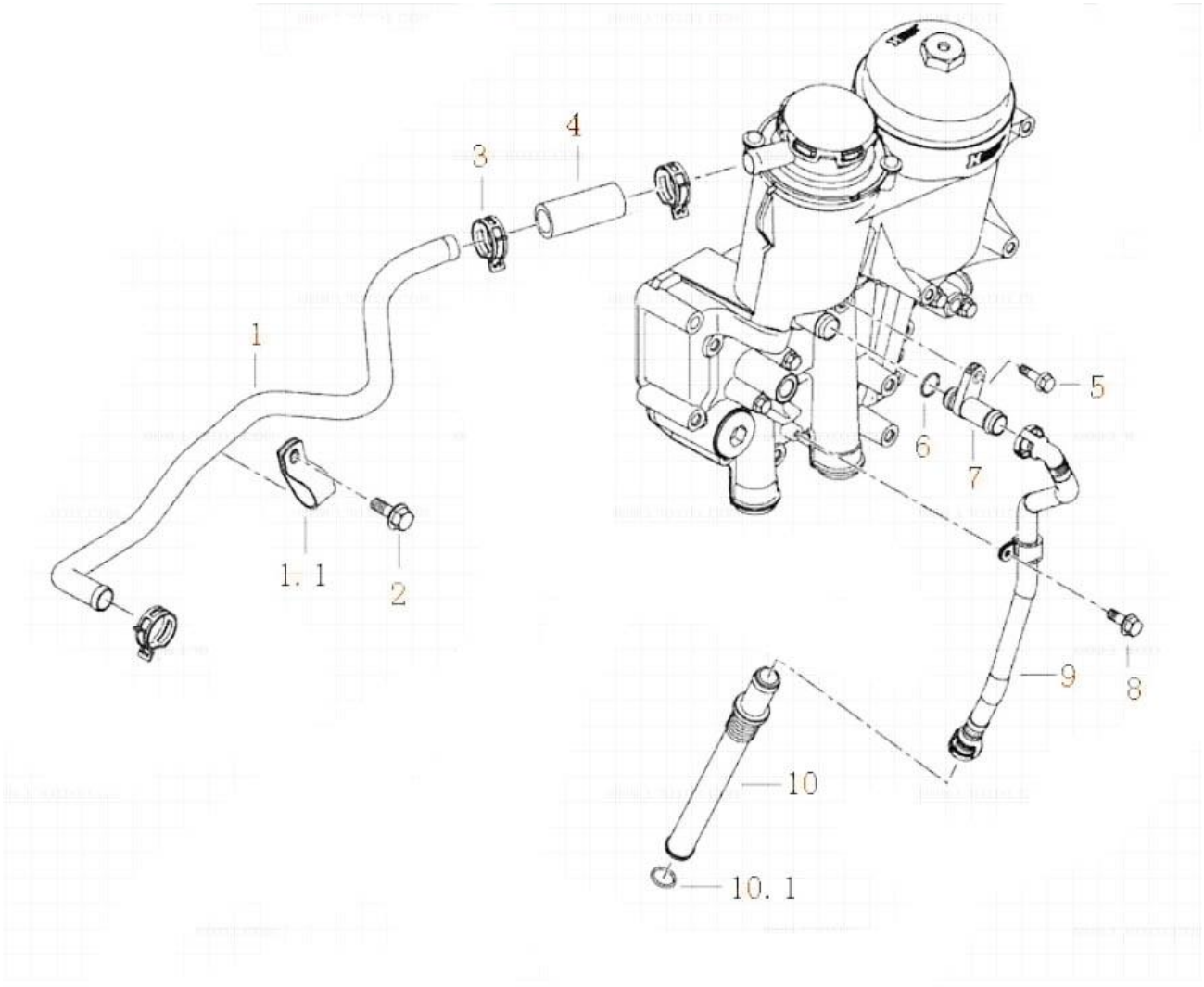

CRANKSHAFT VENTILATION CASE		
Serial	Part Number	Name
1	201V01802-5675	Separator outlet pipe assembly
1.1	201V97401-0458	Pipe clamps
2	MQ6-03216-8605	Hexagon flange bolts
3	MQ6-67420-1229	Flexible steel clamp
4	200V96330-0346	Connecting hoses
5	MQ6-03216-8206	Hexagon flange bolts
6	MQ6-56936-0893	O-ring
7	200V98130-0549	Joints
8	MQ6-03216-8203	Hexagon flange bolts
9	200V01802-5573	Separator oil return pipe
10	200V05701-0374	Separator return pipe connector
10.1	MQ6-56936-1300	O-ring

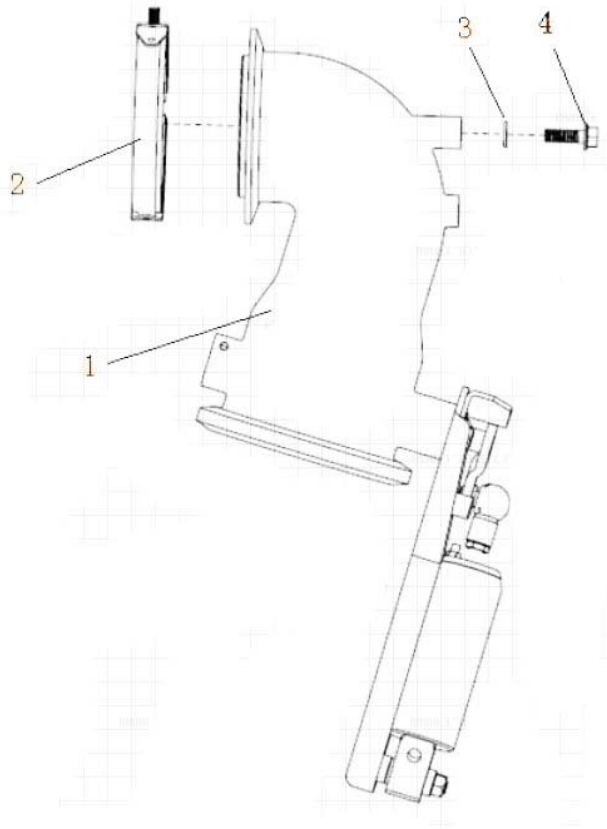

EXAUST PIPE		
SINOTRUK MC11 ENGINE CATALOG		
Serial	Part Number	Name
1	202V15201-6184	Exhaust pipe
2	202V15201-6166	Clamp
3	MQ6-15013-0411	Gasket
4	MQ6-01289-0274	Hex bolt

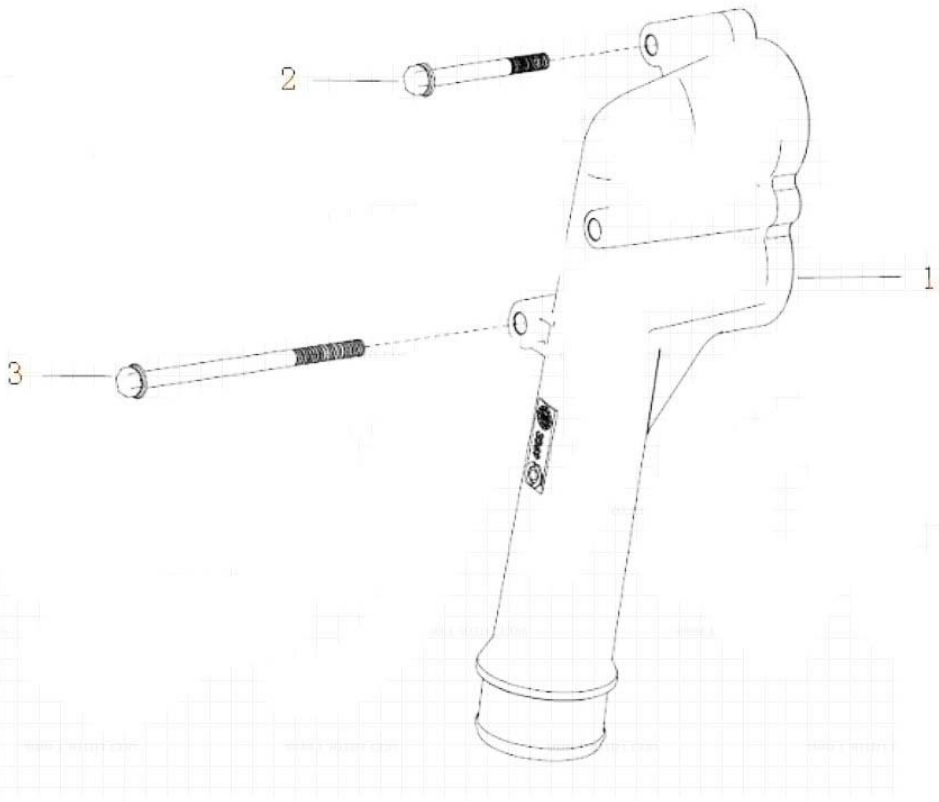

COOLANT EXHAUST PIPE		
SINOTRUK MC11 ENGINE CATALOG		
Serial	Part Number	Name
1	201V06302-0643	Thermostat pipe
2	MQ6-03216-8314	Hex bolt
3	MQ6-03216-8320	Hex bolt

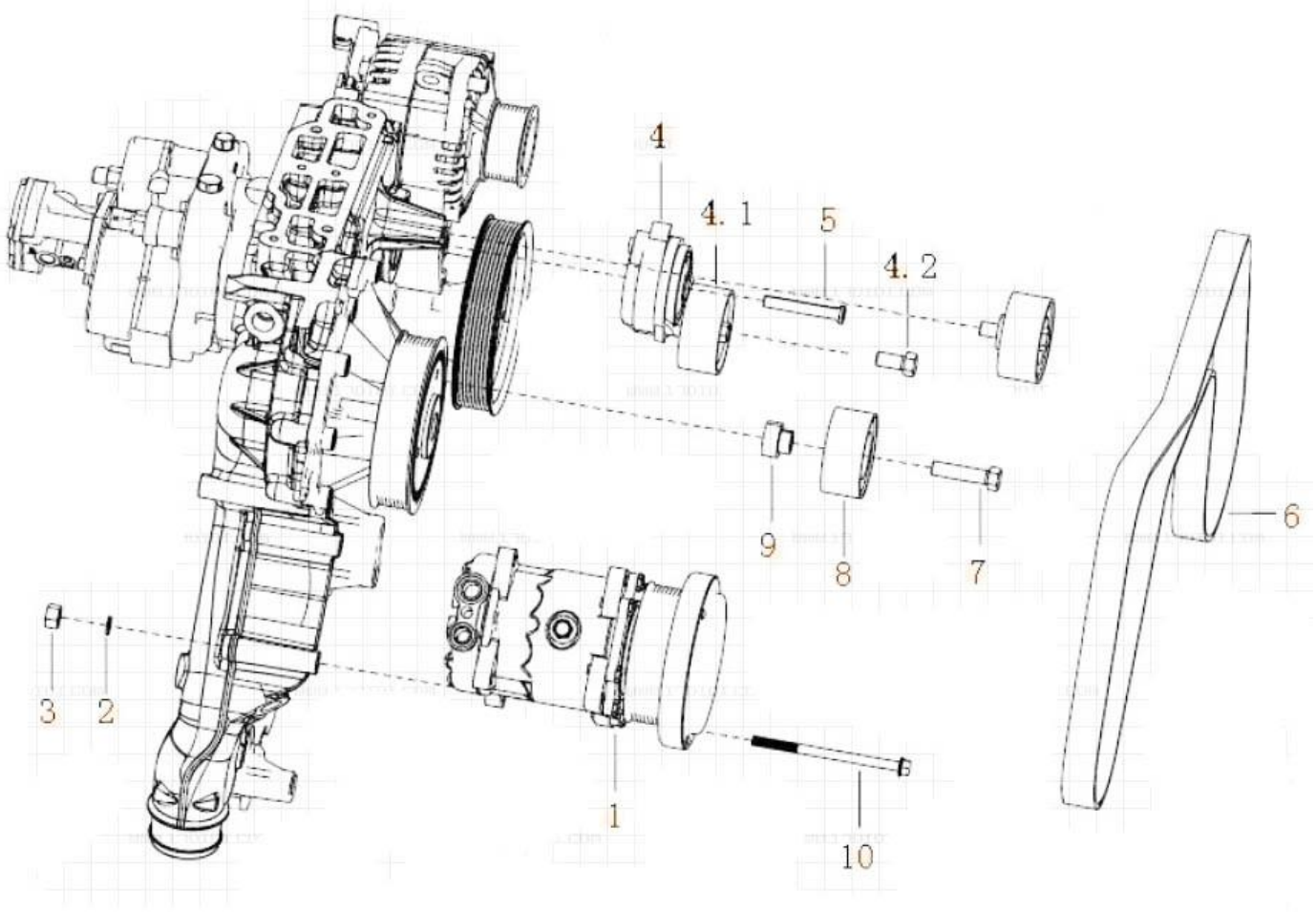

AC COMPRESSOR		
SINOTRUK MC11 ENGINE CATALOG		
Serial	Part Number	Name
1	200V77970-7028	Refrigeration Compressors
2	MQ6-15013-0412	Washer
3	MQ6-11065-2115	Screw nut
4	201V95800-7477	Automatic tensioner
4.1	201V95800-6099	Idler
4.2	201V90020-0439	Hexagonal bolt
5	200V90040-0007	Countersunk screws
6	200V96820-0345	V-ribbed belt
7	200V90020-0436	Hexagonal bolt
8	201V95800-6099	Idler
9	200V91701-0892	Spacing sleeve
10	VG1246060066	Hexagon socket head bolt

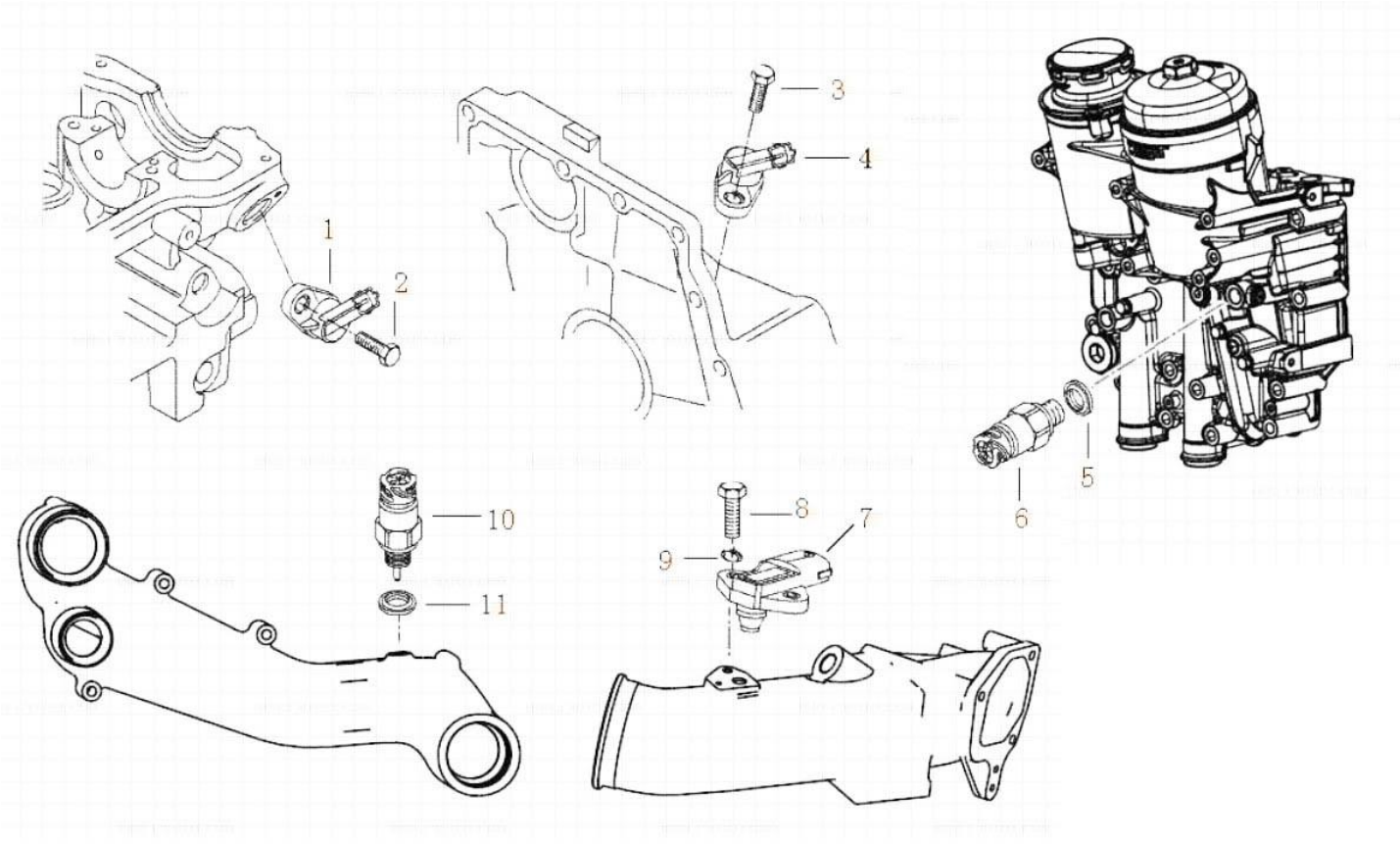

ENGINE SURVAILLANCE		
Serial	Part Number	Name
1	200V27120-7038	Speed Sensor
2	MQ6-03216-8202	Hexagon flange bolts
3	MQ6-03216-8203	Hexagon flange bolts
4	200V27120-7038	Speed Sensor
5	MQ6-56631-0109	Composite sealing gasket
6	VG1092090311	Electronic oil pressure sensor
7	VG1557090012	Temperature and pressure sensors
8	Q150B0414	Hex head bolt
9	Q41804	Wave spring washers
10	201V27421-0190	Water temperature sensor
11	MQ6-56631-0105	Composite sealing gasket

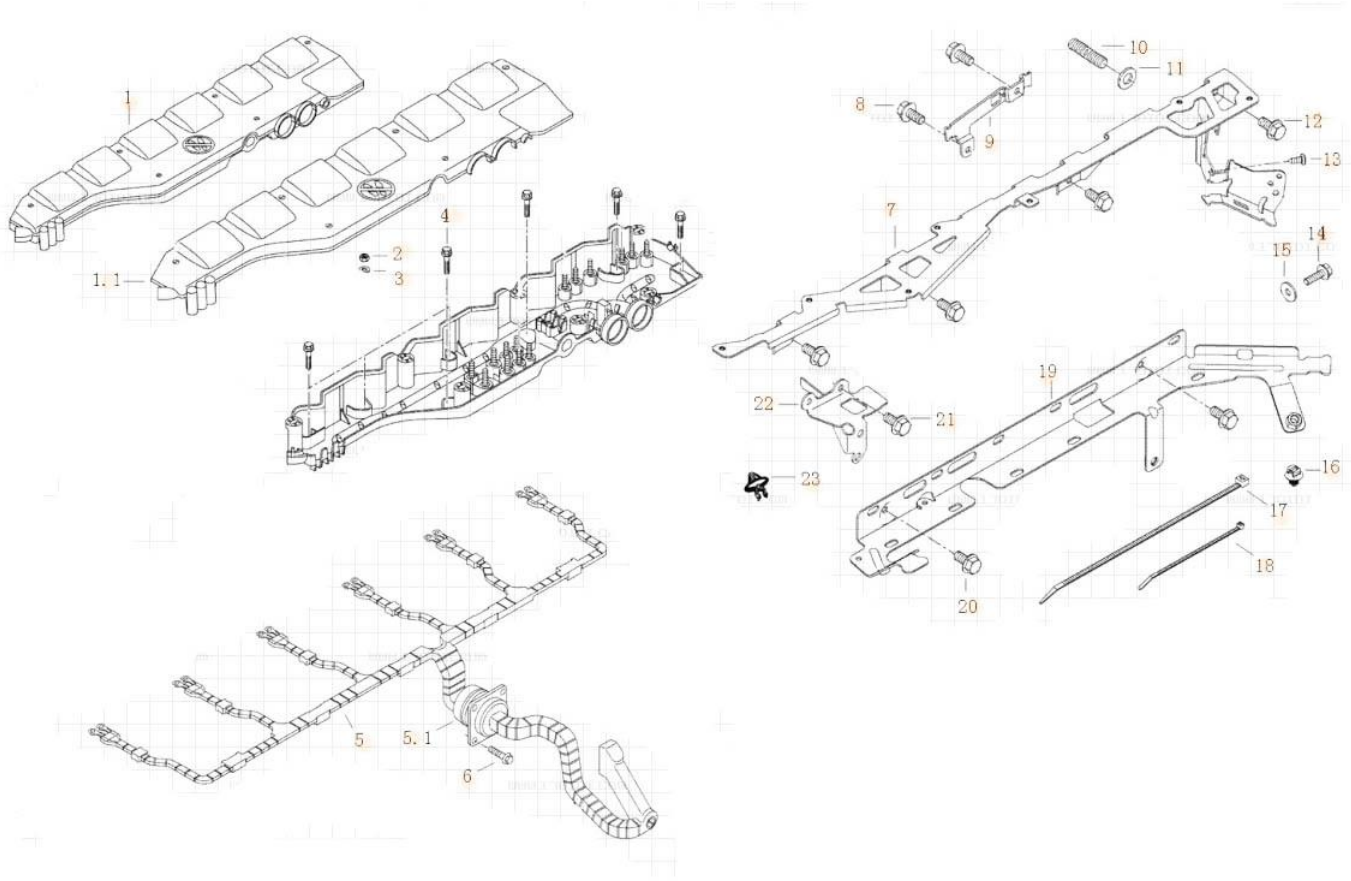

ECU CABLE		
Serial	Part Number	Name
1	812W25424-6343	Cable assy
1.1	810W25424-0033	Cable tube
1.2	812W25458-6745	Cable assy
2	MQ6-11099-0043	Screw nut
3	MQ6-15013-0911	Washer
4	MQ6-03216-8203	Hexagon flange bolts
5	202V25413-6256	Injector cable
5.1	202V25413-6258	Injector cable sealing ring
6	MQ6-03216-8203	Hexagon flange bolts
7	200V25441-5081	Harness pipe support
8	MQ6-03216-8303	Hexagon flange bolts
9	200V25441-0342	Harness Bracket
10	200V91020-0310	Stud
11	MQ6-16169-0047	Lock washer
12	MQ6-03216-8303	Hexagon flange bolts
13	MQ6-07159-0014	Self-tapping screws
14	MQ6-03216-8204	Hexagon flange bolts

15	MQ6-15193-0307	Large Washer
16	200V97401-0557	Single line bundle Ties
17	190003171392	Plastic fastening tape
18	190003171390	Plastic fastening tape
19	200V25441-6109	Cable Bracket
20	MQ6-03216-8303	Hexagon flange bolts
21	MQ6-03216-8303	Hexagon flange bolts
22	200V27440-5035	Rail pressure sensor bracket
23	200V97430-0005	Bellows clamp